DAIRY FARM MANAGEMENT
AND
ADVISORY SYSTEMS
IN EU AND TURKEY

Volume 1

TR0703.01-02/FA

Translated by: Y. Baybars ÖNCÜ - Gökhan TEZEL

This publication / book is funded by the European Union.
The contents of this publication are the sole responsibility of Cattle Breeders' Association of Aydın
and can in no way be taken to reflect the views of the European Union.

Editor:
Prof. Dr. Salahattin KUMLU

Authors List:

Prof. Dr. Numan AKMAN
Ankara University
Faculty of Agriculture
Department of Animal Science,
Ankara

Prof. Dr. İ. Coşkun CEYLAN
Ankara University
Faculty of Agriculture
Department of Agricultural Economy, Ankara

Prof. Dr. Murat GÖRGÜLÜ
Çukurova University
Faculty of Agriculture
Department of Animal Science, Adana

Prof. Dr. Yaşar KARADAĞ
Gaziosmanpaşa University
Faculty of Agriculture
Department of Field Crops, Tokat

Assoc. Prof. Dr. M. Çağrı KARAKURUM
Mehmet Akif University
Faculty of Veterinary Medicine
Department of Internal Diseases, Burdur

Assist. Prof. Dr. Marija KLOPCIC
University of Ljubljana
Biotechnical Faculty
Department of Animal Science, SLOVENIA

Prof. Dr. Salahattin KUMLU
Antalya

Dr. Çağla Yüksel KAYA KUYULULU
Technical Advisor, CBAA,
Ankara

Emine Seda PAYIK
Head of Technical Services Unit, CBAA,
Aydın

Prof. Dr. Cengiz SANCAK
Ankara University
Faculty of Agriculture
Department of Field Crops, Ankara

Prof. Dr. Can UZMAY
Ege University
Faculty of Agriculture
Department of Animal Science,
İzmir

Prof. Dr. İbrahim YILMAZ
Akdeniz University
Faculty of Agriculture
Department of Agricultural Economy, Antalya

Prof. Dr. Osman YALDIZ
Akdeniz University
Faculty of Agriculture
Department of Agricultural Machinery, Antalya

Dr. Milan ZJALIC
Technical Advisor,
International Committee of Animal Recording
(ICAR), Rome, ITALY

Preface

Almost all of the countries that comprehend the strategic importance of agricultural sector and are able to formulate and implement corresponding policies are included in the group of developed countries. Livestock-raising has an important place in agriculture. Cattle-breeding is one of the most contributing sub-sectors among livestock raising activities. Contribution of cattle breeding to animal production manifests itself mainly with milk and meat production.

Cattle-breeding makes significant contributions to human nutrition by the production of important products as well as reviving the economy. It both provides the food and leather sector with important raw materials and is a notable customer of feed industry, machinery industry and drug industry. Furthermore, domestic and foreign trade of meat and milk products as well as livestock, embryo, sperm, etc. increases each year.

The above-mentioned characteristics of the sector has not only ensured the widespread raising of cattle throughout the world, but also caused the procedures concerning cattle-raising to be evaluated among national policies. Milk production is always included in agricultural laws enacted in the US, while milk and meat have been among few products contained in the common agricultural policy of the EU, and common market regulations on these products have always been among the key tools of agricultural policies. Particularly most of the developed countries have not failed to implement effective policies regarding cattle breeding, generally for milk production. Policies implemented for year in the EU are among the most effective and prominent ones.

Whatever the tools used in the policies carried out within the scope of the EU are, the main purpose has always been to "increase productivity, raise the income of the people working in the sector, ensure market stability, guarantee the continuity of supply and keep the consumer prices at rational levels. The EU has taken various measures as required by this understanding. Establishment of this understanding in Turkey will resolve many associated problems.

Turkey is obliged to render its cattle breeding sector capable of competing with major countries in this field in the world, mainly EU countries. This change cannot be made merely with the resolution of the public. In other words, even if the measures to be taken by the public are appropriate, they may be insufficient. At this point, what the breeders have to do is to give priority to and implement practices that will provide the sector with competitive power. Briefly, the existing structure of the sector should be immediately turned into a

structure that is more efficient and enable higher production. At this point, attention should be focused on short-term and medium-term practices that will facilitate this transformation.

In order to enhance the competitiveness of breeders, guide their activities in the light of science and developments, and be able to supply the protein need of the country in a quality manner, it is important that the advisory services related to enterprise management are provided by the Cattle Breeders Associations. As in most of the EU member countries, the implementation of a farm advisory system, which includes topics such as environment, public, animal and plant health, identification and registration of animals, reporting of diseases, and animal welfare, is a necessity in our country as well in terms of providing breeders with technical support with respect to land and farm management.

With the project titled "Building Knowledge Bridges on Dairy Farm Management for Future", it is aimed to lay the foundations of a farm advisory centre in the province of Aydın. It is intended to carry out a study in Aydın, which will bring awareness regarding EU standards and legislation that the sector will face in the future as well as preparing the sector for competition with the EU and the world. To that end, it is planned to establish a "farm advisory centre" within the body of CBAA (Cattle Breeders Association of Aydın) to train farm advisors specialized in cattle breeding, who will assist in the member enterprises of CBAA and MPAA to carry out quality production, taking into account topics such as productivity, feeding, improvement, environment, animal health and welfare, and infuse enterprise management and sustainable production practices to them. Farm Advisory Centre of Aydın that will train such advisors will be put into the service of breeders within the scope of the project.

One of the main elements that will contribute to ensuring a swift transition from the existing structure to a more efficient one is organization, and another is the inclusion of knowledge into the production process. One of the most appropriate ways of including knowledge into the production process is to supply producers, association personnel and field professionals with advanced publication systems, proper sources of knowledge and training support.

With the book "Advisory Systems in the EU and Turkey, and Management of Dairy Cattle Enterprises", it is aimed to create a guiding source for our country, decision-makers in the sector, academics, trade bodies and breeders regarding enterprise management and farm advisory system with the contributions of local and foreign specialists within the scope of the project. We believe that the book will assist in the comprehension of the advisory systems in the world and contribute substantially to the enhancement of the welfare and awareness of producers. We owe a debt of gratitude to everyone who contributed to the preparation of the book with this faith and understanding.

Regards,

Mehmet Sedat GÜNGÖR
Chairman of the Board
Cattle Breeders Association of Aydın

Contents

1. CHAPTER

Introduction

Prof. Dr. Salahattin KUMLU

According to the official statistics, agricultural production value, which was TL 17 billion in 2000, increased continuously over the years and reached TL 79 billion in 2010. This 5 times increase in value in such a short time of one decade is a simple indicator of the rapid change and development in agriculture. Nevertheless, the share of agriculture in total GDP decreased by 2% to 8.3% level. It is possible to interpret this fall in different ways. The interpretation is adopted and claimed here is as follows: "The development observed in the agricultural sector in Turkey is promising but is not sufficient to compete with other sectors." Therefore, it seems obligatory that all people and groups related to agricultural sector have to make more efforts today and in the future.

It is not sufficient to express the importance of agriculture merely by its contribution to GDP. Agricultural sector has important contributions to the economy of the country, such as making use of natural resources, creating employment, and serving as a market and providing raw material for the manufacturing industry.

Animal husbandry, one of the two sub-sectors of agricultural sector, is reported to have 22% share in agricultural production. Thus, it can be calculated that livestock sector has 2% share in the total GDP. Therefore, one can claim that livestock is an insignificant sector. However, animal husbandry has important contributions such as food safety, labor employment, slowing down the immigration from rural to urban areas and allowing agricultural areas to be utilized more effectively. Hence, livestock sector will maintain its existence as a significant sub-sector in agricultural production and economy of the country in the future as it has been in the past.

As is the case throughout the world, one of the most important sub-sectors of livestock sector in Turkey is doubtlessly cattle breeding. Cattle breeders have to play an essential role not only in milk production but also in meat production in Turkey where pig breeding is very insignificant. According to current statistics, 92% of milk production and 78% of meat production in Turkey is obtained from cattle breeding. These data indicate that cattle breeding sector successfully fulfils its role in Turkey.

Recent projections indicate that the importance of cattle breeding will further rise in Turkey. General opinion is as follows: "Turkey has to increase cow milk production by 70% to 18 million tons, cattle meat production by 50% to 950 thousand tons and the number of cows

by 25% to 5 millions in 10 years in order to be able to meet its needs domestically." Milk yield, carcass yield and fertility should be substantially escalated and losses of livestock at any age should be minimized so as to reach the projected production values. In order to achieve all of them, it is essential to provide a stable environment, raise the number of holdings producing at economies of scale, consolidate producer organizations, increase the quality of labor, improve housing and feeding conditions and minimize epidemics and hygienic problems.

One of the recent remarkable developments in the cattle breeding sector in Turkey is the increase in the number of medium and large scale holdings. According to the data of the Ministry of Food, Agriculture and Livestock (MoFAL), the number of holdings breeding 10-49 cows increased by 82%, 50-99 cows by 118% and over 100 cows by 56% in 2007-2011 periods. It is quite interesting that such a progress was made in 3-4 years. If this development had arisen out of the capacity increase of the existing holdings, it could have been judged very positively. Unfortunately, as the situation is exactly the opposite, it would be more rational to act with suspicion towards this increase in the sector. This is because the chance of medium and large scale holdings established with public support by investors out of the sector, who do not have experience on cattle breeding, to survive and be successful does not seem high. This risk is even higher for holdings that do not employ qualified labor and benefit systematically from consultation and training services.

Under the circumstances, it is essential to provide the medium-large scale holdings that have been recently established or increased their capacities with training and advisory services in necessary fields and meet their trained and experienced labor needs in an attempt to increase their chance of surviving and being successful.

Having realized this need, Cattle Breeders' Association of Aydın (CBAA or Association) designed a project and made the necessary application to benefit from the European Union funds. The project titled "Building Knowledge Bridges on Dairy Farm Management for Future", which is prepared in collaboration with International Committee for Animal Recording (ICAR), German Holstein Association (Deutscher Holstein Verband, DHV), German Animal Breeders' Association (Arbeitsgemeinschaft Deutscher Tierzüchter- ADT Projekt GmbH) and Adnan Menderes University Faculty of Veterinary Medicine, was approved by the relevant authorities and put into effect in March 2011.

Goals of the project put into effect by local and foreign stakeholders are briefly listed below:

- Preparing farmers for modern, high-quality agricultural production standards and ensuring them to adopt the applicable production practices so that the production turns towards the environment, animal welfare and quality,
- Ensuring exchange of knowledge and experience on advisory and farm management systems with German cattle breeders and their organizations,
- Executing a study that will compare the legislation and implementations of farm management and advisory systems in the EU and Turkey,

- Identifying the needs of cattle breeding holdings in Aydın,
- Training (at least) five farm advisors to be employed in Aydın,
- Establishing a farm advisory system and developing it as a model in an effort to enhance the effectiveness of small and medium scale farms and ensure them to function in compliance with higher standards according with the practices of the EU.

One of the significant outputs of this 12-month project is the preparation of the book titled "Farm Advisory Systems and Dairy Farm Management". Time given for the preparation of this book to local and foreign experts was only 4 months. No doubt, it has not been easy to complete in 4 months such a book that covers two different subjects and contains the contributions of numerous local and foreign experts. It would not be possible to publish this book if the sensibility and preliminary works of the esteemed authors that contributed to this book had not exist.

Short preparation time made it inevitable for the book to have some deficiencies and errors. For instance, many subjects are not included in the book, such as cattle genetic improvement programs, classification and mating, raising of cattle for breeding and slaughter, meat productivity and quality. We will make efforts to make up the deficiencies and correct the errors (if any) in the next editions.

While designing the book, two main chapters were emphasized, namely, agricultural advisory and management of dairy cattle farms. Furthermore, a special chapter is included in the book, presenting Aydın CBA by virtue of the fact that they are major stakeholder of the project as well as cattle breeding in Aydın. While presenting Aydın cattle breeding, results of the questionnaire will be made use of, which was conducted for this purpose within the scope of the project.

The book contains two chapters (chapter 3 and 4) related to agricultural advisory systems. Chapter 3 presents the legislation and practices in the EU. Chapter 4 gives information on past practices, and current legal infrastructure and practices in Turkey.

All other chapters are related to dairy cattle breeding and management of dairy cattle farms. The subjects dealt with in these chapters were chosen to meet the needs of professionals that will carry out the services as farm advisors. Two chapters on herd planning, prepared by two esteemed academics, are included in the book. The purpose is to allow the advisors that will serve on the field to have different opinions on the subject.

Order of the chapters was set to complement each other.

Opinions in each chapter of the book as well as responsibilities that may arise out of those opinions belong to the author of the respective chapter.

There is no doubt that this study, completed in a short time with the contributions of numerous experts and planned to be published 2,000 pieces initially, will be useful. Any criticism and contribution of readers and the concerned public is welcomed so as to bring the book to perfection.

2. CHAPTER

Cattle Breeding in Aydın

Emine Seda PAYIK - Dr. Çağla Yüksel KAYA KUYULULU

As in many other fields, the province of Aydın has a special place in Turkey in terms of cattle breeding as well. Next sections present the studies executed by Cattle Breeders' Association of Aydın (CBAA or Association) and the overview of the province of Aydın, making use of the data related to such studies. Later, the results of the questionnaire conducted within the scope of this project are discussed. Finally, the overall situation is assessed taking into account both the questionnaire results and statistics, and recommendations are presented.

2.1 Activities of the Cattle Breeders' Association of Aydın and Current Situation

Record keeping efforts that will contribute to the herdbook activities in Turkey have gained pace with the projects executed in collaboration with Italian and German governments. Turkish-ANAFI Project for Improving Dairy Cattle Farming, supported by the Italian government, was executed in 9 provinces (Aydın, Balıkesir, Burdur, Isparta, İzmir, Denizli, Manisa, Muğla and Uşak) between 1989 and 1994. Cattle Breeding Information System Project, executed in collaboration with the German government, was initiated in 5 provinces (Bursa, Edirne, Kırklareli, Konya and Samsun) in 1990, extended to many other provinces in the following years and finally ended in 2000.

Objective of both of the projects was to establish a registry system in Turkey and ensure the foundation of associations that would execute the herdbook system. Breeders were encouraged to get organized by these projects, and Cattle Breeders' Associations began to be established as from 1995.

Cattle Breeders' Association of Aydın was established by 11 founding members and began to function officially with the permission letter of TUGEM (General Directorate for Agricultural Production and Development) dated 20.10.1995 and numbered 8217.

The Association carries out its activities with 49 personnel and 28 vehicles.

Table 2.1 CBAA Personnel

Veterinarian	Manager	Agronomist	Technician	Administrative staff	Total
4	4	16	23	2	49

These activities are supported by the Project Coordinator of the Provincial Directorate for Food, Agriculture and Livestock.

Activities of the Association

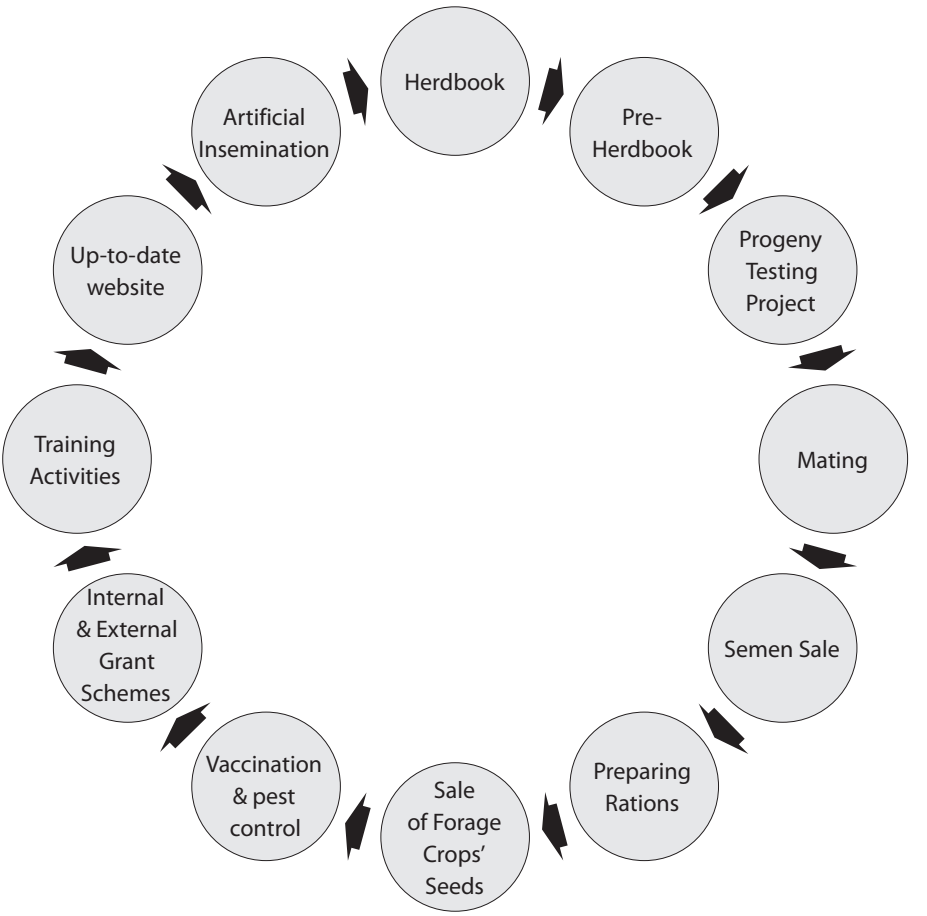

Herdbook: It is the registry system established for animals bearing the qualities of the breed they belong to in herds where breeding and productivity records are maintained. It is regularly visited each month to receive data records and register them in the e-improvement system.

Pre-Herdbook: It is a provisional registry system for animals bearing the qualities of the breed they belong to, whose mother and father are known but are not registered in productivity records. In the pre-herdbook system, ear tagging and registry procedures within the province have been carried out since 2006 within the framework of the pre-herdbook protocol, signed with the Provincial Directorate for Food, Agriculture and Livestock. Since 2011, pre-herdbook herds have been visited every 20 days to tag and register the newborn calves.

Artificial insemination: In response to the demand from the members in 2010, a protocol was signed with Aydın Chamber of Veterinary Medicine to work with 124 private veterinarians. In 2011, the number of private veterinarians was increased to 132. These veterinarians use the semen supplied by the Association to perform artificial insemination in member farms.

Progeny Testing Project: It is a project executed in cooperation with the Cattle Breeders' Association of Turkey and the Ministry of Food, Agriculture and Livestock.

Mating Activities and Semen Sales: Mating activities are performed in line with the demand from the member farms. Mating activities allow to determine with which bull the cows shall be mated to have calves with better genetics in the next generation.

Up to the present, 21,000 animals were mated in 821 farms to ensure insemination with the right bull.

Vaccination and Pest Control: In consequence of widespread abnormal calf births in the province in 2010, CBAA began to collaborate with Adnan Menderes University Faculty of Veterinary Medicine and the Provincial Directorate for Food, Agriculture and Livestock to prevent viral diseases that were transmitted by insects and brought serious economic losses, and carry out preventive pesticide applications in our farms where the bovine animals were exposed to the risk of diseases transmitted by Culicoides insects. In response to the demand from the members, CBAA hase continued the preventive practices in 2011 as well.

Preparing Rations: In order to meet the needs and expectations of the members, more attention is paid to ration preparation services aiming to minimize the feeding costs, major item of the operating expenses, and to ensure the implementation of the correct nutrition methods.

Sale of Forage Crop Seeds: In order to meet the needs and expectations of the members in time and ensure them to obtain their roughage requirements in an economical and quality manner, seeds of various forage crops (corn, ryegrass, rapeseed, alfalfa, turnip, etc.) are supplied.

Internal and External Grant Schemes: Within the framework of the "Active Labor Market Measures Grant Scheme - Civil Society Dialogue II – Fisheries and Agricultural Grant Scheme", the project titled "Building Knowledge Bridges on Dairy Farm Management for Future" was prepared by Cattle Breeders' Association of Aydın with the partnerships of Aydın Milk Producers' Association, International Committee for Animal Recording (ICAR) and German Holstein Association (DHV) in 2010.

Training Programs: Silage day events, trainings and night meetings were conducted to make the members aware of any practical innovation in order to continuously develop quality and keep the members and staff trained and motivated.

Website www.adsyb.org: Current news could be followed from the website of CBAA.

Herdbook and Pre-Herdbook Records

In the e-improvement system in Turkey, the number of cattle which have Herdbook and pre-herdbook records in 2011 is 3,5 million heads, in which 328 thousand (in 38,574 farms) is in the province of Aydın. Cattle population of Aydın is approximately 10% of that of Turkey.

Table 2.2 CBAA number of members, cattle and herd size by years

Years	Member Herds	Cattle	Herd size (heads cattle)
2002	750	13939	19
2003	933	21917	24
2004	1165	30677	26
2005	1756	49806	28
2006	2405	64460	27
2007	3200	84429	26
2008	3425	94710	28
2009	3703	104215	28
2010	4371	124618	29
2011	5064	157789	31

In 2002, CBAA had 750 registered members, whereas this figure was 5064 in 2011 which means the number of its members increased 7 times.

Table 2.3 Total number of cattle and cows in the Herdbook System in Aegean Region

Provinces	Cows	Cattle
Aydın	66128	157789
İzmir	147445	336924
Muğla	22147	52947
Denizli	42970	101626
Uşak	28815	69159
Manisa	30567	72283

Provinces	Cows	Cattle
Kütahya	15666	36203
Afyon	38984	90621
Total	**392722**	**916060**

The number of cattle registered in the Herdbook system in the Aegean Region is 393 thousand heads. The number of cows registered in the Herdbook system of the region is 916 thousand heads. 37% of the milking cows in the Aegean Region is in İzmir and 17% is in Aydın.

Table 2.4 Average number of cattle and cows per herd registered in the Herdbook System in Turkey and Aydın

Years	Cattle numbers (heads)		Cow numbers (heads)	
	Aydın	Turkey	Aydın	Turkey
2008	27,7	29,4	11,0	13,3
2009	28,1	25,3	11,9	11,1
2010	28,5	25,8	12,3	11,5
2011	31,2	26,5	13,2	12,0

In 2008, the average number of cattle and cows per herd in Aydın was 27.7 and 11, respectively. Increases in the number of cattle were 4% in 2009, 3.25% in 2010 and 4.5% in 2011.

Table 2.5 Legal status of members of CBAA and average number of cattle per herd

	Herd	Cow/Herd	Cattle/Herd
Individual	4988	12	28
Company	35	217	496
Cooperative	5	192	638

Total number of the members whose herdbook records are kept by the Association was 5064 in 2011. There are 5 companies, 35 cooperatives and 5024 individual breeders' whose herdbook records are kept. Average number of cows per herd in companies and cooperatives are 217 and 192 heads, respectively.

Table 2.6 CBAA member herds per district

District	Herd	Cow	Cow/Herd
Çine	1046	13715	13
Center	733	10162	14
Nazilli	515	5641	11
Kuyucak	468	5834	12
Bozdoğan	447	4919	11
Karacasu	269	2365	9
Yenipazar	258	2890	11
Karpuzlu	257	2910	11
Germencik	236	6369	27
Koçarlı	200	2873	14
Köşk	178	1716	10
Söke	165	3048	18
İncirliova	158	2108	13
Sultanhisar	85	923	11
Buharkent	35	440	13
Didim	35	515	15
Kuşadası	9	243	27
Aydın Total	5094	66671	13

If we have a look at the number of members and cattle in the districts of Aydın, Çine has the highest number of members. It is followed by the central district. Although the number of members is low in some districts, the total number of cattle is high. This is because those members are relatively larger farms. One of the largest dairy cattle farms in Turkey is located in Germencik district.

Table 2.7 Change in number of cows registered in Herdbook system per district by year

District	Year				
	2007	2008	2009	2010	2011
Bozdoğan	3018	3424	3854	3899	4919
Buharkent	322	589	495	371	440
Çine	3346	5240	6401	8818	13715
Didim	176	168	276	384	515
Germencik	1394	1806	4094	4897	6369
İncirliova	1299	1597	1926	1967	2108
Karacasu	1251	1438	1697	1708	2365
Karpuzlu	586	995	1519	1860	2910
Koçarlı	1336	1626	2082	2179	2873
Köşk	746	926	1194	1310	1716
Kuşadası	151	152	270	253	243
Kuyucak	4072	4381	4998	5186	5834
Center	4348	5107	6135	7212	10162
Nazilli	3591	4057	4604	4654	5641
Söke	1246	1537	2208	2500	3048
Sultanhisar	292	397	557	668	923
Yenipazar	973	1229	1675	1999	2890
Aydın Total	28147	34669	43985	49865	66671

Among the high-yielded breeds, Holstein breed is the most widespread breed in the province of Aydın. Montbeliarde cattle can be found in the member farms in Kuyucak, and Red & White Holstein cattle can be found in the member farms in Kuşadası.

Table 2.8 Cattle breeds registered in the Herdbook and pre-herdbook system in Aydın

Breed	Cows	Heifers	Young heifer	Female calf	Male cattle	Total
HF Black & White	103892	36061	17020	17053	51782	**225808**
HF Red & White	457	182	120	108	325	**1192**
Brown Swiss	27939	9085	6660	4026	17124	**64834**
Simmental	1864	759	478	378	1289	**4768**
Montbeliarde	1125	544	265	280	653	**2867**
Total	**135277**	**46631**	**24543**	**21845**	**71173**	**299469**

The reason for the high number of Holstein breed in the member farms in Aydın is that milk production is the primary objective of cattle breeding and that Holstein breed can easily adapt to the conditions. Brown Swiss breed is mostly raised in highlands both for dairy and meat production purposes.

Table 2.9 Average milk yields (305 days) in districts by years

District	2006		2007		2008		2009		2010	
	Nb. of Lactations	Milk yield	Nb. of Lactations	Milk yield	Nb. of Lactations	Milk yield	Nb. of Lactations	Milk yield	Nb. of Lactations	Milk yield
Bozdoğan	542	5577	887	5639	1472	5488	1834	5619	1883	5709
Buharkent	26	6156	88	5567	172	5834	185	5848	185	5896
Çine	536	5059	1298	5322	2355	5070	3206	5211	3712	5129
Didim	12	5984	39	6192	52	6216	107	5922	107	5971
Germencik	181	5835	360	5879	2187	7612	2427	7824	1860	6501
İncirliova	217	6176	376	6174	614	6402	674	6337	622	6375
Karacasu	250	5992	424	5805	655	5778	856	5931	681	5854

District	2006		2007		2008		2009		2010	
	Nb. of Lactations	Milk yield	Nb. of Lactations	Milk yield	Nb. of Lactations	Milk yield	Nb. of Lactations	Milk yield	Nb. of Lactations	Milk yield
Karpuzlu	74	5294	178	5393	498	5003	729	5301	853	5425
Koçarlı	183	5680	385	6316	772	6107	976	6260	895	6256
Köşk	130	4951	240	5496	445	5333	585	5400	569	5387
Kuşadası	32	7571	47	6912	54	6908	51	6808	60	6865
Kuyucak	741	5930	1196	6061	1819	6143	2430	6282	2203	6098
Center	798	5712	1338	6088	2282	6084	2946	6014	2948	5996
Nazilli	640	6172	1069	6343	1679	6253	2077	6400	1909	6360
Söke	183	6811	350	6977	644	7297	839	7144	827	6655
Sultanhisar	57	5487	98	6144	189	5946	236	5777	255	5712
Yenipazar	180	5745	332	5918	607	5734	879	5786	875	6019
Aydın Total	4782	5890	8705	6013	16496	6071	21037	6109	20444	6012

Average milk yield (305 days) of cows registered in the Herdbook system of Aydın increased in parallel to the number of registered cows each year. The increase in the 305-day milk yield in the district of Germencik in 2008 and 2009 can be attributed to Söktaş livestock enterprise located in that district. Although the number of members and milking cows are high in the district of Çine, its 305-day average milk yield is low compared to other districts.

Artificial Insemination

With the establishment of associations throughout Turkey, artificial insemination applications have increased both in member and non-member cattle farms. A rapid increase was noted in 2005 due to the incentives granted to private veterinarians. As from 2006, CBAA has ensured the private veterinarians contracted throughout the province to register the artificial inseminations they performed in the farms of breeders, thereby ensuring the parentage records of newborn calves to be registered properly.

Table 2.10 Number of registered artificial inseminations according to the E-Improvement Database

Years	2003	2004	2005	2006	2007	2008	2009	2010	2011
Türkiye	468118	722050	1687746	2433822	2792163	2216774	2358460	3093944	2911755
Aydın	13961	22876	52288	85971	111914	104074	108250	146408	128992

Progeny Testing Project

Owing to the Herdbook studies, Turkish bulls are tested in the progeny testing project. In this scope, selected cows from model farms are inseminated with high quality semen, for producing of the new test bulls.

In consequence of the studies, Aydın has

1 bull in the 2nd cycle,

10 bulls in the 4th cycle,

6 bulls in the 5th cycle

4 bulls in the 6th cycle, which amount up to 21 bulls, which were selected and sent to Menemen bull station. 8 of these bulls were raised to obtain quality semen. These semen were sold later.

Table 2.11 Selected test bulls from Aydın for the Progeny Testing Project

Order	Bull no	Name	Cycle	Date of Birth
1	TR0922696	AYDINLI	2	09.07.2001
2	TR09172790	BAŞKAYA	4	18.06.2003
3	TR0998823	SEYMEN	4	06.05.2003
4	TR09100646	YÖRE	4	28.04.2003
5	TR09208118	ADALILAR	5	01.02.2004
6	TR09209060	ERTÜRK	5	06.03.2004
7	TR09209212	YÖRÜK	5	23.03.2004
8	TR09333940	YENİCELİ	6	07.07.2005

For milk controls throughout Turkey, milk samples are taken once in two months from the daughters of the test bulls. Among these bulls, average lactation milk yield of the daughters of the bull named Aydınlı is the highest. It is also reported that average number of somatic cells of this bull is below 400,000/litre.

Table 2.12 Average milk yield and milk control results of daughters of test bulls

Bull ID	Milk yield of daughters (lt)	Milk fat (%)	Protein (%)	Number of somatic cells (1000/lt)	Age of first calving (months)	Calving interval (days)
TR0922696 Aydınlı	7207	3,6	3,2	135	28	387
TR09172790 Başkaya	7135	3,6	3,2	149	27	385
TR0998823 Seymen	5665	3,9	3,1	100	28	385
TR09100646 Yöre	7048	3,1	2,9	118	26	399

Farm Information System (CIBIS)

CIBIS provides information and reporting services related to the cattle farms. According to the data of December 2011, there are 131 member farms in the province of Aydın and 2276 member farms throughout Turkey. CIBIS allows member farms to see and monitor the livestock movements related to their farms, registered data (insemination, calf records, new animal records, subsidy information) and livestock reports.

2.2 Survey Study and Results

2.2.1 Introduction

The Project **"Building Knowledge Bridges on Dairy Farm Management for Future"** with the Reference number **TR0703.01-02/178** had been accepted to be funded by the contracting authority, Central Finance and Contracts Unit (CFCU), under the Civil Society Dialogue II: Fisheries and Agriculture Grant Scheme (CSD-II/FA), and the Grant Agreement had been signed on April 21st, 2011.Upon the signing of the contract, the preparation phase of the project has started taking into consideration the project timeline and action plan. After having set up the project team, the project office and the web site has also been formed accordingly. The other main activities of the preparation phase, as has been mentioned in the grant application form, are the preparation of the book on "Dairy Farm Management and Advisory Systems in EU and Turkey", to conduct a survey among member breeders of Cattle Breeders' of Association of Aydın (CBAA) and Milk Producers' Association of Aydın (MPAA), and to organize a project inception workshop with the stakeholders of the dairy sector in Aydın. Just after the formation of the project office and the team, an informal meeting with the members of the academia had been held, in which the necessity to change the order of the actions of the preparation phase has been considered crucial for the efficiency and sustainability of the project. Therefore, it has been decided to conduct the survey among the

members and pre-members of CBAA before the preparation the aforementioned book on dairy farm management and advisory systems so as to ensure that the book covers the needs of the dairy sector in Aydın in the means of knowledge of dairy farm management and EU practices. Thus, this article aims at giving information on the survey method, sampling, survey questionnaire and the results of the survey.

The above-mentioned survey questionnaire was prepared between July 22– September 6, 2011 and the questionnaire was tested in 8 different holdings with different herd sizes between September 7-10th, 2011. Thereafter, necessary adjustments and amendments to the questionnaire were applied and the actual survey on field started on September 14 and ended on October 19, in 16 districts of Aydın out of 17 totals, with six surveyors.

2.2.2 Material

The data used for sampling and overview of the dairy sector in Aydın province are mainly about cattle breeding at herd and district level and are taken from the Herdbook and Pre-Herdbook Systems, kept by the Cattle Breeders' Association of Turkey (CBAT) together with the Ministry of Food, Agriculture and Livestock (MoFAL).

Survey questionnaire is prepared by the support of Prof.Dr.Salahattin KUMLU and Prof. Dr.Numan AKMAN and is based on "Dairy Farm Sustainability Check sheet" prepared by Appropriate Technology Transfer for Rural Areas (ATTRA) (ATTRA, 2001).

2.2.3 Method

The Questionnaire

A questionnaire of 63 questions has been prepared and applied to the sample population by the private surveyors in order to collect the data. The questionnaire is made up of 11 parts. Each part consists of five or six relevant questions, necessary to evaluate the knowledge of the breeder on certain topics, thus revealing the information and advisory need of breeders in Aydın. The last part of the questionnaire targets only the Herdbook farms, which are the full members of CBAA.

Sampling

The survey population are the dairy cattle holdings located in Aydın, and registered to either pre-herdbook or herdbook system on the date of July 8, 2011. The list of the population is taken from the E-ISLAH database. The total number of holdings at the date of listing of the population for Herdbook had been 4762 and 32716 for Pre-Herdbook. It was decided that the herds with less than five cows in the Pre-Herdbook system are not targeted with this survey, since they would not be receiving advisory services for farm management from CBAA. Therefore, 28132 holdings were taken off the list of Pre-Herdbook. The total Pre-Herdbook holding population before the sampling became 4584 herds.

Table 2.13 Distribution of the registered and sampled holdings in Aydın

	Nb. of Holdings	Nb. of samples	Percent
Herdbook	4762	464	9,7
Preherdbook	4584	52	1,1
Total	**9346**	**516**	**5,5**

Sampling from Pre-herdbook and Herdbook systems were carried out separately. All theherds were assigned randomly a 6-digit automatic identification number. The herds that had a number ending with "5" were selected which resulted in 474 herds for the Herdbook. The herds located in 10 remote villages were taken out (2.1%) and total Herdbook samples were left 464 herds, which represent 9.74% of the total Herdbook population. Same process was applied to the Pre-Herdbook herds as well, and 52 herds were selected (1.13%). As a result, a total of 516 herds made up the sample of the survey in which 89.92% are Herdbook farms and 10.08% are Pre-Herdbook farms (Table 2.13). A spare list was also selected from the herds with a number ending with zero from both of the systems (Pre-Herdbook and Herdbook); in order to be used if some of the herds in the main list were not found or rejected answering.

Table 2.14 Basic data of population and sample herds registered in herdbook system

Herdbook Herds	Population	Sample
Average nb of female cattle (heads)	23	24
Lactation Duration (days)	359	357
Milk Yield (lt)	6562	6507
Milk Yield for 305 days (lt)	5546	5530

Data Collection in Field

After the sampling process data, collection in field started and was carried out as planned with 97.1% accuracy. 501 breeders answered the survey questionnaire. However, 15 breeders in total either rejected to be involved in the research survey or could not be found at the time of the data collection. In addition, 19 of the farms sampled as Herdbook farms had become Pre-Herdbook farms while four Pre-Herdbook sampled farms had become Herdbook farms at the time of the survey.

Table 2.15 Number of farms that were surveyed in Herdbook and Pre-herdbook System and their share in survey population

Nb. of farms	Herdbook Farms	Pre-herdbook Farms	Rejected	Total
Selected Sample	464	52	-	516
Surveyed Sample	445	56	15	501
% of Population	%9,4	%1,2	-	%5,4

The distribution of the breeders among districts of Aydın province was not taken into consideration during the sampling process. However, the surveyed sample and population herds had similar distribution trend as expected. While most of the population and sample herds are located in Çine (20.8% and 19.4% respectively), Buharkent, Didim and Kuşadası all have less than 1%. The distribution of population and sample herds in the districts of Aydın is given in 2.16.

Table 2.16 Distribution of the survey population and the sample herds in the Herdbook and Pre-Herdbook System according to the districts (farms, %)

Districts	Herdbook		Pre-herdbook		TOTAL	
	Population %	Sample %	Population %	Sample %	Population %	Sample %
Bozdoğan	8,7	9,4	7,9	12,5	8,3	9,8
Buharkent	0,7	0,0	0,2	0,0	0,5	0,0
Çine	19,6	19,8	22,1	16,1	20,8	19,4
Didim	0,7	0,9	0,9	0,0	0,7	0,8
Germencik	5,0	4,3	2,3	3,6	3,6	4,2
İncirliova	3,2	2,5	3,0	1,8	3,1	2,4
Karacasu	5,5	5,4	4,1	3,6	4,8	5,2
Karpuzlu	4,5	5,4	10,9	10,7	7,7	6,0
Koçarlı	4,1	5,2	7,4	14,3	5,7	6,2
Köşk	3,5	4,7	3,0	0,0	3,3	4,2
Kuşadası	0,2	0,0	0,2	0,0	0,2	0,0

Districts	Herdbook		Pre-herdbook		TOTAL	
	Population %	Sample %	Population %	Sample %	Population %	Sample %
Kuyucak	9,6	7,9	4,7	1,8	7,2	7,2
Center	14,4	14,8	12,4	17,9	13,4	15,2
Nazilli	10,6	11,9	6,5	8,9	8,6	11,6
Söke	3,2	2,9	8,3	5,4	5,7	3,2
Sultanhisar	1,6	1,1	0,8	1,8	1,2	1,2
Yenipazar	5,1	3,8	5,2	1,8	5,1	3,6
Total %	**100,0**	**100,0**	**100,0**	**100,0**	**100,0**	**100,0**
Total Nb of Farms	**4762**	**445**	**4584**	**56**	**9346**	**501**

Calculation of Labor Force Unit

For understanding the farm management and labor used on farm for dairy cattle breeding and milk production, questions regarding hired and family laborwere asked to the breeders. Since there were different genders at different age groups working on the farm for this purpose, it has been considered necessary to calculate the labor unit. The coefficients introduced by Açıl and Demirci (1984) are used for calculation of the labor used for cattle breeding and milk production activities in the surveyed farms (Table 2.17).

Table 2.17 Labor Force Unit (LFU) Coefficients for man and woman by age groups (Açıl, et al., 1984)

Age	Man	Woman
7-14	0,50	0,50
15-49	1,00	0,75
50 +	0,75	0,50

2.2.4 Results

Demographics and General Information on the Holdings

One of the most important data for comparison of cattle herds is the herd size. The total number of female cattle per herd is used as the herd size indicator for the purpose of this

evaluation which is calculated with the number of heifers (> 1 years old) and cows in the farm. Table 2.18 shows the distribution of the farms in the population and sample by herd size classes. It could be seenclearly from the data that the dairy cattle farms in Aydın are mostly medium sized farms with 45.7% owning 10-19 heads of female cattle. Farms with less than 3 female cattle are present in the sampled herds since the survey was carried out more than 1.5 month after downloading the data of the population from the database.

Table 2.18 Distribution of population and sample farms by herd size classes (head female cattle/herd)

Herd size class (head female cattle/herd)	Population, %	Sample, %
< 3	0,0	1,0
3-9	34,3	22,0
10-19	45,7	43,3
20-49	16,9	28,3
50-99	2,3	4,0
>=100	0,7	1,4
Total	**100**	**100**
Total nb of farms	**9346**	**501**

This part of the survey consisted of questions that intended to gather information on breeder and asset structure, number of cattle, machinery and the main income activity of the holding.

The holdings in which the survey was conducted are mostly owned by men (95.2%) between the ages of 31-49 (51.4%) while only 4.8% of the holdings are owned by women, again mostly between 31-49 years old (66.7%). The young (18-30 years old) and old (≥65 years old)breeders nearly have the same share in the whole population while there aren't any woman breeders older than 65 years of age (Table 2.19).

Table 2.19 Distribution of the breeders according to age classes and gender

Breeder	18-30 years old, %	31-49 years old, %	50-65 years old, %	≥65 years old, %	Total, %	Total nb. of breeders	Total nb. of breeders, %
Man	5,5	51,4	37,9	5,2	**100,0**	**477**	**95,2**
Woman	4,1	66,7	29,2	0,0	**100,0**	**24**	**4,8**
Total	**5,4**	**52,1**	**37,5**	**5,0**	**100,0**	**501**	**100**

If gender, age group and education are compared at the same time, it becomes obvious that most of the breeders are men between 31-49 years old who graduated from primary school (36.0%). If only women breeders are taken into consideration, it is seen that more than 80% have primary school diploma (Table 2.20). With a relatively young breeder population (57.5%), Aydın has higher education level (high school or higher) in the Herdbook (14%) than in the Pre-herdbook System (5.5%).

Table 2.20 Distribution of the breeders according to level of education, gender and age groups

		Level of Education					
		Primary School		Secondary School		High School and higher	
Gender	Age Group	Total N %	Gender specific N %	Total N %	Gender specific N %	Total N %	Gender specific N %
Man	18-30	2,2	2,3	1,6	1,7	1,0	1,1
	31-49	36,0	37,8	5,1	5,3	8,1	8,5
	50-65	30,8	32,3	1,8	1,9	3,6	3,8
	≥ 65	5,0	5,3	0,0	0,0	0,0	0,0
	Subtotal	**74,0**	**77,7**	**8,5**	**8,9**	**12,7**	**13,4**
Woman	18-30	0,2	4,1	0,0	0,0	0,0	0,0
	31-49	2,6	54,1	0,2	4,2	0,4	8,3
	50-65	1,2	25,0	0,2	4,2	0,0	0,0
	≥ 65	0,0	0,0	0,0	0,0	0,0	0,0
	Subtotal	**4,0**	**83,2**	**0,4**	**8,4**	**0,4**	**8,4**
TOTAL		**78,0**	**-**	**8,9**	**-**	**13,1**	**-**
Total nb of breeders answered the question		**388**		**44**		**65**	

To understand the labor structure of the dairy cattle farms in Aydın, breeders were asked about the family and hired labor used for milk production and cattle breeding. More than half of the farms, both in Herdbook and Pre-herdbook Systems have two or more family members

working for the milk production and cattle breeding. While 31% of all the farms have at least one family member working at the holding for the aforementioned activities, in 11% of them the family members are not sharing the work done at the farm for milk production and cattle breeding. Nonetheless, hired labor isn't very popular among Aydın's dairy cattle herds since only 53 farms out of 501 (11%) hired one(40 farms) or more (13 farms)workers to take care of the cattle (Table 2.21).

Table 2.21 Labor Force Unit (LFU) of family and hired labor for milk production and cattle breeding by herd size (head female cattle/herd)

Total N, %		Herd Size Class (head female cattle)						TOTAL	
		< 3	3-9	10-19	20-49	50-99	>=100	Total N, %	Nb. of farms
Labor (MPU, family)	0	%0,0	%1,4	%2,8	%3,8	%2,2	%1,0	**%11,2**	**56**
	<= 1	%0,8	%7,4	%13,0	%9,2	%0,4	%0,2	**%30,9**	**155**
	1-1,5	%0,2	%4,4	%10,4	%2,4	%0,6	%0,0	**%18,0**	**90**
	> 1,5	%0,0	%8,8	%17,2	%13,0	%0,8	%0,2	**%39,9**	**200**
	Total	**%1,0**	**%22,0**	**%43,3**	**%28,3**	**%4,0**	**%1,4**	**%100,0**	**501**
Labor (MPU, hired)	0	%1,0	%21,8	%41,5	%23,8	%1,4	%0,0	**%89,4**	**448**
	<= 1	%0,0	%0,2	%1,4	%3,8	%2,0	%0,6	**%8,0**	**40**
	1-1,5	%0,0	%0,0	%0,2	%0,0	%0,0	%0,2	**%0,4**	**2**
	> 1,5	%0,0	%0,0	%0,2	%0,8	%0,6	%0,6	**%2,2**	**11**
	Total	**%1,0**	**%22,0**	**%43,3**	**%28,3**	**%4,0**	**%1,4**	**%100,0**	**501**

There are seven different breeds of dairy cattle in Aydın whereas Black and White Holstein Friesian (HF) cattle are the dominant breed. Only 3% of the surveyed farms do not have Black and White HF cattle, in other words 486 farms out of 501 have declared that they own B&W Holstein cattle in their farms. One of the farms which were surveyed didn't have any cattle left while 26 of the farms have 3 different breeds in their farms. There are only cattle from one of the breeds in 358, two different breeds in 116 of the farms. There are 6 Montbeliarde, 3 Brown Swiss and 1 Red and White HF herds only with these breeds with an average of 18 heads of cattle per herd.

Table 2.22 Distribution of the cattle population in the sample herds by breed and herd size (head female cattle/herd)

Breeds	Total cattle, %	Total farms, %	Average Heads of Cattle/Herd
BW Holstein Friesian	91,4	97,0	28,92
Brown Swiss	2,7	5,8	9,69
RW Holstein Friesian	2,6	9,6	8,27
Montbeliarde	1,8	11,4	7,39
Simmental	0,6	3,2	4,00
Jersey	0,4	4,8	3,79
Native	0,4	1,6	8,25
TOTAL	**100**	**133**	**-**

The size of the arable land used for agricultural production by the surveyed farms varies among different size classes. However, there are a small number of farms (4.8%) which do not own or use any arable land for crop production or grazing of the livestock. When it comes to the land ownership, the survey results show that 77% of the holdings in the sampled population own some amount of arable land, whether it is irrigated or not. The breeders, who have responded as not being the owner of the land, use the land owned by their parents in more than one third of the cases.

Table 2.23 Number of holdings, land used by the holding and number of cows according to the land size

Land Size Class (da)	Owned land (da)	Family property (da)	Land tenancy (da)	UAA (da)		Herd Size (head female cattle)
	%	%	%	Nb. farms, %	Mean	Mean
Holdings without land	0,0	0,0	0,0	4,6	0,0	14
< 5	0,0	0,0	0,0	0,8	3,5	10
5-9	0,3	0,3	0,3	5,6	7,0	11
10-49	6,2	12,5	12,6	38,9	27,0	15
50-99	9,8	27,3	21,4	27,1	68,1	21
100-499	42,2	46,9	50,1	21,6	169	30
>= 500	41,4	12,9	15,5	1,4	3110	67
Total	**100,0**	**100,0**	**100,0**	**100**	**109**	**20**

Majority of the cattle farms in Aydın has a Utilized Agricultural Area (UAA) between 10-49 da with an average of 27 da and 15 head female cattle. Furthermore, there are significant amount of holdings with more than 50 da UAA (50%) including 7 farms with more than 500 da (Table 2.23). While the biggest herd (180 head female cattle) included in the survey, has 350 da of UAA, the biggest farm which has 1111 ha of UAA just has 141 female cattle in contrast.

When it comes to machinery used in the holding it is obvious that there is a tractor in many of the holdings with an average age of 17 years. As expected most of the tractors are found in the holdings with a land size between 10-49 da. On the other hand, most of the mower (35%), baler (48%), feed grinder (44%) and forage harvester (41%) are found in the holdings with a land size of 100-499 da (Table 2.24).

Table 2.24 Number of holdings with agricultural machinery by land size, and average age (years) of the machinery

Land size (da)	Nb. of holdings with machinery						Total Nb. of Holdings
	Tractor	Mower	Baler	Thresher	Feed Grinder	Forage harvester	
Holdings without land	14	2	0	0	0	2	23
< 5 da	1	0	0	0	0	0	4
5–9 da	9	0	0	0	0	0	28
10-49 da	152	47	3	3	9	13	195
50-99 da	121	54	9	5	9	33	136
100-499 da	99	57	12	2	17	35	108
> 500 da	7	3	1	0	4	2	7
Total	**403**	**163**	**25**	**10**	**39**	**85**	**501**
Average age of machinery (yrs.)	17	7	9	20	6	7	-

The machinery solely used for milk production in the holding such as milking machine and bucket are present in many of the holdings, 485 and 240 respectively. On the contrary,cooling tankis found just in 9% of all the farms surveyed. Similarly, there is a small percent of holdings with forage harvester and feed mixer, mainly in medium sized herds. The overall age of these machinery used for milk production and feed, isfairly young when compared with the age of the agricultural machinery (Table 2.25). There are only 5 farms out of 501 surveyed which doesn't have any machinery with a herd size ranging from 1 to 9 head female cattle.

Table 2.25 Share of holdings with feed and milk machinery by herd size, and average age (years) and capacity (ton)

Herd Size Class (head female cattle)	Share of holdings with machinery by herd size, %					Cooling tank capacity (ton)
	Forage harvester	Milking Machine	Milk bucket	Feed mixer	Cooling tank	
< 3	%1,2	%0,8	%0,4	%0,0	%0,0	-
3-9	%4,7	%21,2	%19,2	%4,3	%4,3	1,5
10-19	%29,4	%44,0	%44,2	%8,7	%13,0	1,4
20-49	%50,6	%28,5	%31,2	%47,8	%45,7	1,1
50-99	%12,9	%4,1	%4,6	%17,4	%26,1	1,6
>=100	%1,2	%1,4	%0,4	%21,8	%10,9	2,9
Total, %	%100	%100	%100	%100	%100	1,5
Total, nb of holdings	**85**	**485**	**240**	**23**	**46**	**-**
Average age of machinery (yrs.)	7	5	2	2	3	-

The future plans of the holdings to buy a new machinery was asked and 58% of the holdings declared that they have a plan to buy a new machinery in the near future. 22% of the breeders have a plan to buy a feed mixer in the near future. The two other machinery, which are planned to be bought to the farm, are tractor (17%) and forage harvester (16%). Therefore, it would not be a mistake to draw a conclusion that nearly 1/5th of the dairy cattle farms in Aydın are looking forward to improving their forage production and feed management. In fact this shall not be a surprise since 87% of all the farms surveyed answered that milk production is their main income source while cattle breeding (sale of breeding cattle) and crop production only had 4% each, separately. Furthermore, 91% of all farms have forage production.

Farm Management, Record Keeping and Planning

In order to understand the managerial skills of the breeder, the record keeping habits were asked and a significant number of breeders (96%) declared that they are keeping records on their own, in which 95% keeps these records to a notebook. None of the breeders surveyed are using a Herd Management Software while only 1% uses computer to keep the records. The main data kept at farm level are the Herdbook (85%) and insemination (84%) data, as expected, whereas only 7% of the farms declared that they are bookkeeping. Yet only one bookkeeping breeder had an idea about the cost of per kg milk, whereas three had an idea about the cost of forage production per da. The other breeders providing data on the

cost of milk and forage production were 26 and 19 in total, respectively. Furthermore, in 46% of the surveyed farms that are keeping records, data related to Herdbook, milk production, health and insemination are all recorded.

Table 2.26 Number and share of farms producing main forage crops, total and average (per farm) cultivated land used for main forage crops

Forage production	Total nb of farms	Share in total farms (%)	Total land (da)	Average land (da)
Maize silage (dry+irr)	338	%74	9729	29
Vetch (dry+irr)	250	%55	8283	33
Wheat&Barley	187	%41	6033	32
Alfalfa (dry+irr)	153	%34	2655	17
Rutabaga	52	%11	420	8
Other total (dry+irr)	41	%9	920	22
Ryegrass	8	%2	95	12
Total forage production	**456**	**%100**	**28148**	**56**

As mentioned earlier, 91% of all surveyed farms have forage production. Table 2.26 shows the main forage crops produced in Aydın province for dairy cattle feeding. Maize production for silage covers 35%, vetch covers 29% and main cereals like wheat and barley covers 21% of the total land used for forage production in the surveyed farms. In other words, maize for silage is produced in 74%, vetch is produced in 55% and wheat and barley are produced in 41% of the farms with a forage production. With such a high rate of forage production, it is quite natural that the farm manure is mainly used as fertilizer in the agricultural land. Of all the farms surveyed (501 farms), 96% uses the farm manure in own land for production while only 2% sell it and 0.6% uses it for heating.

Housing Systems

To be able to understand the housing facilities and the characteristics of the dairy cattle farms in Aydın, questionnaire also included questions on housing of the adult and young cattle in the holdings. The housing of dairy cattle in Turkey and in particular Aydın region could be grouped as enclosed or roofed-open; loose, free or tied stall housing systems. Even though the use of different groups could vary according to the region, tradition and climate the survey results show that more than 70% of the dairy cattle in Aydın are kept in a roofed-open, loose/free stall housing system. In addition the share of different housing systems were analyzed by region, herd size, land size, age of the breeder and calculated LFU to understand

if there is any relation between housing system and the other variables. The only significant difference could be recognized when the housing systems are analyzed by district (Table 2.27), in particular in İncirliova and Karpuzlu where roofed-open housing systems are more commonly used than enclosed system and in Söke where enclosed and roofed-open systems are equally preferred.

Table 2.27 Housing systems of milking cows in surveyed farms by district

Districts	Barn type for milking cows				Total
	Roofed-open, loose/ free-stall housing system	Roofed-open, tied-stall housing system	Enclosed, tied-stall housing system	Enclosed, free-stall housing system	
Bozdoğan	%87,8	%6,1	%6,1	%0,0	**%100**
Çine	%53,6	%11,3	%32,0	%3,1	**%100**
Didim	%75,0	%0,0	%25,0	%0,0	**%100**
Germencik	%66,7	%9,5	%23,8	%0,0	**%100**
İncirliova	%58,3	%25,0	%16,7	%0,0	**%100**
Karacasu	%80,0	%4,0	%16,0	%0,0	**%100**
Karpuzlu	%43,3	%33,3	%20,0	%3,3	**%100**
Koçarlı	%71,0	%9,7	%19,4	%0,0	**%100**
Köşk	%95,2	%4,8	%0,0	%0,0	**%100**
Kuyucak	%88,9	%2,8	%8,3	%0,0	**%100**
Center	%85,5	%3,9	%9,2	%1,3	**%100**
Nazilli	%81,0	%5,2	%10,3	%3,4	**%100**
Söke	%62,5	%18,8	%18,8	%0,0	**%100**
Sultanhisar	%83,3	%0,0	%16,7	%0,0	**%100**
Yenipazar	%88,9	%0,0	%11,1	%0,0	**%100**
Total	**%73,8**	**%8,8**	**%16,0**	**%1,4**	**%100**

When it comes to the housing one of the most important topics is the bedding material for the comfort of the cows that contributes to udder health. Unfortunately, 95% of farms, which answered the question, declared that there is no special bedding material in the barn. Only 4% of these farms use sand while 1% of them use either hay or straw.

Table 2.28 Bedding material used in surveyed farms

Bedding Material used in farms (% of farms)	Cows+Heifers (c>12m)	Calves (6m<c<12m)	Calves (c<6m)
Not Used	%95	%95	%94
Hay	%1	%0	%0
Straw	%0	%1	%2
Sawdust	%0	%0	%0
Rubber Mat	%0	%0	%0
Sand	%4	%4	%4
Hay & Straw	%0	%0	%0,00
Total, %	**%100**	**%100**	**%100**
Total, Nb of farms	**381**	**360**	**359**

Having clean, drinking water available for the adult and young cattle in the barn or in the pasture is another very important topic since water is the most essential of all nutrients required by dairy cattle (Linn, 2010). The results of this survey show that 95% of the dairy cattle in the barn has unlimited access to drinking water while this rate falls to 73% when they are at pasture. The main source of drinking water in the farms is city water supply system (~60%). The other option for the rest of the farms is having water well in the farm while only a very small number of farms use both. In some of the farms, there is an automated drinking bowl (11%) however, 82% of all farms mostly use a watering trough. In addition to the use of watering troughs, 7% of the farms use the feeding trough for the cattle to drink water.

Milking Management, Method, Duration and Characteristics

Milking of the cows is "the" most important activity in the farm in particular from the profitability point of view because it is directly linked with the well-being of the cows. Therefore, utmost attention should be given to the milking equipment, method, training of the person milking the cows and milking center/place (Anonymous, 2010a; 2010b). Aydın is in one of the most important dairy regions of Turkey, the Aegean (18% of Turkey's milk production, 1st in 12 NUTS2 Regions), mechanization of the farms both in crop and livestock production is relatively higher than the other production regions. The best indicator to that could be the use of milking machines. The survey clearly shows that 97.6% of the cattle breeders use milking machine while only 2.4% still milk the animals with hand, in which 25% is men, 17% is women (Table 2.29). Most of the milking machines used are portable/mobile

(87%) machines generally preferred by small and medium sized farms (88.4% in farms with 3-19 head cows). At the same time, there are farms with milking parlors (fixed/immobile) with even 4 cows; whereas 62% of all the milking parlors are found in herds bigger than 20 cows. Another comparison could be made for herds with 50-99 cows; in which 6 out of 7 farms have a milking parlor while one of them still uses portable machines (83 head cows).

The milking machine must always be kept in perfect working order, should be periodically cleaned and get routine maintenance done by a specialist, technician or service person. All milking machines must be regularly serviced and tested on a routine basis at least twice every year (Anonymous, 2010b). Thus, the control interval of milking machine and equipment was asked to the breeders in the scope of this survey study. As a result, 90% of the breeders declared that they call the technician or specialist twice a year or even more often, as recommended.

Table 2.29 Share of farms by milking method and milker

Share of farms		Milker					Total
		Owner	Keeper	Other	Owner+ Keeper	Owner+ Other	
Milking method	Hand	%2,2	%0	%0,2	%0	%0	%2,4
	Machine	%74,4	%7,8	%2,6	%1,2	%1,4	%97,4
	Both	%0,2	%0	%0	%0	%0	%0,2
Total %		**%86,8**	**%7,8**	**%2,8**	**%1,2**	**%1,4**	**%100**
Total Nb.		**435**	**39**	**14**	**6**	**7**	**501**

The continuous use of proper milking routine results in higher milk yields of good quality, fewer problems with udder health, longer cow life expectancy and reduced milking time. All these factors contribute to a higher profit margin per cow (Anonymous, 2010b).The research results show that 99% of the farms have a milking time routine in summer, 95% also has in wintertime. Majority of these farms with a daily milking time routine in the summer milks the animals twice a day (morning, between 6-7 am and afternoon, at 5 pm or later). The winter has its own routine with 3.5% of them milking only once a day, mostly in the morning, between 5.30-7 am.

Labor for milk harvest may account for as much as 80% of annual milking costs and over 50% of routine operational requirements on a dairy farm (Blake, et al., 1978). As today's dairy consolidates, cows are being milked more rapidly through larger milking parlors on larger dairies than before. Because milk is the primary commodity and source of income for producers, the harvesting of milk is the single most important job on any dairy (Vanbaale, et al., 2004). As Blake and McDaniel and Vanbaale and Smith have mentioned that milking is one of the most important activities on the farm, it is very important in the dairy farms of Aydın in

particular for profitability of the farm and quality of the milk. Table 2.30 gives the time spent daily for milking in the surveyed dairy farms by each group of herd size class. The smallest herds spend at most 30 minutes each day for milking their cows while the largest farms that have more than 100 cows spends as much as 4 hours. On the other hand, time spent daily for milking of the cows varies from 1 hour to 4 hours in farms with 50-99 head cows.

Table 2.30 Milking duration by herd size

Milking Duration	Herd Size Class (head cows)						Total	
	< 3	3-9	10-19	20-49	50-99	>=100	Share of farms, %	Nb of farms
< 30m	%50	%0	%0	%0	%0	%0	2	%0
30m	%50	%3	%1	%0	%0	%0	10	%2
45m	%0	%5	%5	%0	%0	%0	20	%4
1h	%0	%49	%24	%10	%14	%0	158	%32
1h15m	%0	%1	%1	%0	%14	%0	6	%1
1h30m	%0	%7	%14	%9	%14	%0	50	%10
2h	%0	%29	%43	%52	%29	%0	186	%38
3h	%0	%5	%11	%17	%14	%0	44	%9
4h	%0	%1	%1	%11	%0	%0	13	%3
> 4h	%0	%0	%1	%1	%14	%100	4	%1
Total	**%100**	**%100**	**%100**	**%100**	**%100**	**%100**	**493**	**%100**

Calf Care

Young stock rearing is an important part of dairy farming. At this stage of herd management, the foundation is laid for the high-yielding dairy cow of the future. The appropriate rearing of the young stock in the dairy cattle farms has proven to be of great influence on future performance. The first few months in a calf's life have utmost importance. A newly born calf does not have antibodies for protection against diseases and the only way to get these antibodies is to drink 1-2 liters of colostrum within the first half an hour after the birth, and the colostrum intake should continue for at least three days. The calf could drink the colostrum directly from her/his mother; however, it is difficult to control the colostrum intake (Anonymous, 2010c).It would not be wrong to comment that breeders in Aydın are aware of the importance of colostrum intake since 78% of them are feeding the calves with colostrum from bottle and a total of 4-5 days in average. Nonetheless, 14% of the surveyed farms continue feeding the calves with colostrum only 1 or 2 more days after birth.

Ideally, after feeding colostrum for three days after birth a gradual change to feeding of whole milk or milk replacer shall start. When the calf is about four weeks of age, the amount of milk may gradually be decreased until weaning takes place (Anonymous, 2010c). It is important to feed the animals with sufficient milk or milk replacer with an appropriate method. The breeders in Aydın mostly use a bottle fitted with a rubber teat to feed the calves with milk (80%). The temperature of the milk fed is another very important topic when it comes to milk feeding because ideally, milk should always be fed at body temperature. However, daily variations in the temperature of heated milk may cause more digestive disorders than cool milk (Anonymous, 2010c). On one hand,88% of the milk fed is given to the calves without any heating process and just after milking, on the other hand a considerable amount of breeders prefer heating the milk before feeding (10%).

The feeding of water, roughage and concentrates usually start as early as one week old. In Aydın, the calves are given water as early as possible, when they are 1 day old (in 50% of the farms). The rest of the 31% of the farms start in the first week whereas in 19% calves start drinking water even after the first week. When it comes to feeding roughage the average age changes between 3-4 weeks although calves are fed earlier with concentrate feed, at 2-3 weeks age.

Weaning takes place at the age of about 2-2½ months (Anonymous, 2010c) generally. The weaning takes place at the age of nearly 3 months in Aydın, which means that milk feeding usually takes a little bit longer than recommended.

Table 2.31 Weaning age of female calves (days)

Weaning age of female calves (days)	Share of farms, %	
=< 30 days	%1,0	
30-59 days	%19,9	
60-89 days	%64,1	
90-120 days	%11,2	
> 120 days	%3,8	
Total, %	**%100**	
Total, Nb of farms	**498**	
Average age of weaning (days)	Mean	86
	Median	90

Housing of young stocks is another key element that affects directly the health and well-being of calves at early stages of their lives as well as in later phases. The housing should be constructed in such a way that the calf gets enough fresh air, in a clean environment with dry bedding. Despite the fact that preferably young calves should be individually housed for about 3 weeks (Anonymous, 2010c), 92% of the surveyed farms declared that they keep

the calves in a group pen in which two-third not only keeps the calves in groups but also in the same barn as the adult cattle where the climate control is quite difficult. Only 4.5% of the farms are able to provide the aforementioned favorable conditions to its calves while another 4% keeps them tied in the barn with adult cattle, which could be described even worse because it increases the chances of spreading the diseases.

Herd Health Management

Maintaining a healthy herd is a constant challenge for the dairy cattle breeders, which could in average cause up to one-fourth of the herd each year if not managed properly (Keown, et al., 2006). Yalçın reported that some studies carried out in the Netherlands show that animal diseases and fertility problems could result in a loss around 10% of marginal production value of the farm (Yalçın, 2008).

The frequency of scheduled veterinarian visits is variable and somewhat dependent on herd size. The Merck Veterinary Manual indicates that herds, which have less than 100 cows, would need at least one scheduled monthly visit of the veterinarian, yet larger herds would require more frequent, for instance weekly, scheduled visits due to high number of calving cows(Anonymous, 2011a).The frequency of veterinarian visits in the surveyed farms show that most of the farms do not have planned, scheduled veterinary services but rather the veterinarian visits the farm on call (39%). Moreover, small and medium sized farms (3-19 head female cattle) get veterinary services with a frequency of weekly to monthly (56% and 44% relatively for 3-9 and 10-19 head female cattle herds) while relatively higher herds get these services more frequently.

Table 2.32 Frequency of veterinarian visits to the farm by herd size classes (head female cattle)

Frequency of Veterinarian visits	Herd Size Class (head female cattle)						Total	
	< 3	3-9	10-19	20-49	50-99	>=100	Share of farms, %	Nb. of farms
In case of need	%80	%38	%42	%37	%30	%29	%39	197
Everyday	%0	%2	%4	%3	%20	%42	%4	21
Once a month	%0	%15	%10	%5	%0	%0	%9	45
Twice a month	%20	%17	%12	%13	%5	%0	%13	66
Once a week	%0	%24	%22	%28	%5	%0	%23	116
Twice a week	%0	%3	%7	%8	%30	%29	%8	38
Other	%0	%1	%3	%6	%10	%0	%4	18
Total	**%100**	**%100**	**%100**	**%100**	**%100**	**%100**	**%100**	**501**

When analyzed according to the overall response counts, the three main reasons for calling a veterinarian in the surveyed farms resulted as; Artificial Insemination (46%), treatment (33%) and calving difficulty (8%). As a result, it could be said that even in one of the most developed milk production region in Turkey, veterinary services are not considered as a part of the herd health management and planning. Instead, their service is still required for artificial insemination, which in fact is not the veterinarians' main activity anymore in most of the developed countries. In most of the cases after a couple of weeks training, the breeders usually get a certificate that enables them to inseminate their own animals. This result also shows that preventive medicine and herd health management still does not get the attention it should in Turkey where there are still serious epidemic diseases present in the cattle population such as blue tongue, bovine tuberculosis, brucellosis, Foot and Mouth Disease (FMD) and anthrax (Anonymous, 2011b). This becomes clear with 80% of the farms declaring that they do not have a vaccination program for their herd. Another reason for not having a herd level vaccination program could be the vaccination program carried out by the Ministry of Food, Agriculture and Livestock for certain diseases.

"Bovine mastitis is the most costly disease affecting dairy cows worldwide. It is estimated that almost half of all cows in any herd have some form of udder inflammation and mastitis-free herds are extremely rare. In fact, the real cost of mastitis is surprising, since many mastitis cases are difficult to notice and therefore its effect on milk production cannot be quantified"(Anonymous, 2010d). The result of this survey is an important proof that most of the time breeders do not realize that their cows have mastitis. According to the survey results, 62% of the herds in Aydın do not have mastitis, only 38% of the breeders declared that there is mastitis in their herd with an average of 3 head cows per year. Linked with this question, the breeders were also asked whether they know the bacteria count in their milk or not. The bacteria count of the milk is not known by 98% of the breeders. Nevertheless, they made estimation when they were asked to do so and the average bacteria count they estimated, varies from30 thousand to 300 thousand per ml.

The cow's health is very much linked to a healthy use of its feet and legs. Feet and leg problems could occur very frequently and easily due to improper housing, bedding and hygienic conditions (Anonymous, 2010e). In 78% of the surveyed farms, the breeder stated that there are no feet and leg problems in his/her herd.

Feeding Management

The dairy farm economics is highly influenced by animal nutrition and feeding management. The aim of feeding management is to provide cows with sufficient nutrients in order to encourage the optimum milk production and good composition. Different stages of lactation require different levels of feed intake. Therefore, in a well-managed dairy cattle farm, the cows shall be fed in 4 different groups according to the four different stages of lactation(Anonymous, 2010f).To understand the feeding management basics of the surveyed

farms, the breeders were asked about their feeding practices during dry period of dairy cows. Nearly half of the breeders decrease the amount of roughage and concentrate feed when the cows are in dry period. However, there are still a significant number of breeders that do not change the amount of feed given during dry and milking periods of lactation (89) and a small number of breeders who increase the amount of roughage while increasing concentrate (51) (Table 2.33).

Table 2.33 Feeding practices during dry period of dairy cows of surveyed breeders

		Concentrate feed use in dry cows			
		Does not change	Increases	Decreases	Total
Roughage feeding in dry cows	Does not change	%17,8	%0,4	%19,0	%37.,2
	Increases	%0,8	%0,6	%10,2	%11,6
	Decreases	%1,0	%1,0	%49,2	%51,2
	Total, %	%19,6	%2,0	%78,4	%100
Total, nb of breeders		500			

Dairy cow feeding behavior could be affected by feeding management practices such as feeding time and frequency. The access to feed is important for maintaining health, welfare and productivity of the high-yielded dairy cows, and a as result for the profitability of the farm. As a general practice, dairy cows are usually fed once or twice a day (Botheras, 2007). The survey results show that dairy cattle farms in Aydın feed the cows twice a day (99%). Only 1% of the surveyed farms feed the cows 3 times a day. The cows are fed between 6:00-8:00 in the morning (98%) and after 17:00 in the afternoon (99%). 6 of the farms also feed the cows at noon.

Another important factor in feeding management is the decision of balances rations for the cows. 95% of the respondents decide on how the daily ration should be by him/herself. Consulting to an expert is an option for 4.3% of the respondents.

The feeding costs are one of the most important cost items of a dairy farm. In order increase the profitability of a farm, farm-grown roughages and in some cases, cereals should be used whenever it is possible. Moreover, additional concentrate mixtures with mineral sand vitamins should be purchased for an optimal milk production at the lowest possible cost (Anonymous, 2010f). Regarding buying of feeding material, 321 farms have declared buying roughage, 493 have declared buying concentrate for the feeding of dairy cows. Hay is one of the most commonly used roughage in dairy cattle farming in Aydın (94% of 321), followed

by fresh alfalfa and maize silage (22%) (Table 2.34).Furthermore, 106 farms also use feed additives, namely mineral salt block (70%), vitamins (27%) and live yeast (10%). Contrarily 19farms do not think that the use of additives make a difference.

Table 2.34 Roughages bought by surveyed farms

Roughages bought	Percent of Cases
Hay (rye, meadow grass..)	%94,4
Alfalfa (fresh)	%22,4
Maize silage	%22,4
Alfalfa (dried)	%6,2
Vetch/Oat	%4,4
Alfalfa (hay)	%1,2
Straw	%1,2
Other	%1,2
Sainfoin	%0,6
Total	**%154,2**
Total, nb of farms	**321**

Breeding Activities

Dairy cattle breeding have been successful in generating genetic progress for traits in particular related to milk production. In order to develop a breeding scheme, the breeding goals should be defined clearly and realistic. Dairy cattle breeding goals consist of functional traits as well as milk production traits (Buch, 2010); however, it has shown a significant change over the years. Today, big differences in breeding goals are mostly seen in-between countries, according to the needs of the society. In the past, breeding used to be in the hands of a few distinguished 'breeders'. Contrarily, science and technology now dominates animal breeding (Van Der Werf, 1999). Nevertheless, dairy cattle breeders still have an indisputable impact on genetic improvement and the structure of animal breeding programs (Van Der Werf, 1999), specifically in countries like Turkey where Artificial Insemination is considered as the main breeding activity and yet so far, the most common technology.

If the role of breeders in genetic improvement is to be assessed for Aydın region, the outcome of the survey concerning the attitude of breeders towards their herds' actual situation could give a clear idea. The results show that more than half of the breeders do not consider that the cows in the farm have any characteristics or traits that are inadequate or not improved sufficiently. In spite of this response, fortunately the other half (45%) is aware of the inadequacies in the herd such as repeat breeding (22%), low milk yield (14%) and small body size (3%).

Sire selection is equally important for animal breeding program. AI technicians have the biggest influence not only on the sire selection itself(73%) but also on the selection of the sire origin (whether it is an imported or local sire) (60%) of the breeders in Aydın region while the sire catalogues are in the second place (19%). The influence of semen companies is as low as 1%. However, the origin of the AI bull in other words, whether the semen is imported or it is local production, is a decision that 41% of the breeders prefer to make themselves. Imported frozen, tested bull semen is more preferred (37%) than the local ones (4%).

The optimal time for the first insemination of heifers in the herd is very important in order to prevent calving difficulties. The heifers should be well developed and have the appropriate bodyweight. Thus, the proper age for insemination is determined by the development of the heifer, usually at an average age of about 14-15 months (Anonymous, 2010c). The average age of first insemination in Aydın is between 16-17 months. Bodyweight (280-300 kg in average) is the criteria for 3% of the farms for determining the insemination age of the heifers. Number of inseminations per service is 1.9; number of calves per cow is 7 on average in the surveyed farms.

2.3 Conclusion and Recommendations

The province of Aydın has a great potential in terms of agriculture and stock breeding. Record keeping and productivity assessment required for improvement studies which are the basis of stock breeding are carried out by CBAA. The existing records are assessed to contribute to the development of cattle breeding in the province. Genetic improvement activities are being carried out successfully by improving the genetic structure of cattle through artificial insemination.

In conclusion, the dairy cattle farms which are member of Aydın Cattle Breeders' Association need to improve their managerial skills by increasing their knowledge on feed, calf, young stock, reproduction and herd health management. Above all, they have to be more aware of the breeding activities and practices, which take place on their own farms. Keeping records, in particular bookkeeping would unquestionably increase the efficiency and profitability of the farm. The first 3 sources of information of the surveyed farms are the private veterinarians, other breeders and advisors of the breeders' or producers' association Table 2.35.

Table 2.35 First 3 sources of information of dairy cattle farms in Aydın

First 3 Sources of information	Responses	
	Nb. of farms	Percent of Cases
Veterinarians	444	%90,6
Other breeders	249	%50,8
Advisor of Breeders'/Producers' Association	245	%50,0
Written and visual resources	56	%11,4
Other	55	%11,2
Feed companies	42	%8,6
Internet	27	%5,5
Private consultant	24	%4,9
Official Veterinarians	18	%3,7
Public Technician/Agronomist	10	%2,0
Advisors of dairy plant	8	%1,6
MoFAL	2	%0,4
None	1	%0,2
Total, nb of farms	**490**	**%100**

Therefore, in order to provide the breeders' with herd management and bookkeeping information, private veterinarians and advisors of breeders' association shall be trained and more study visit projects/programs for breeders to countries with more developed dairy cattle farming systems shall be organized at first. But the Cattle Breeders' Association, as a part of its main duties, should develop a dairy advisory system eventually, inspired by and taking as an example the ones its international counterparts already have been carrying out successfully for many years now. The main topics preferred by the breeders are product quality and hygiene, feeding management and herd health management. In fact, these results show clearly that the breeders are aware of the lacking parts in their farms and it is crystal clear that they are market oriented or at least they would like to strengthen their marketing competitiveness.

Table 2.36 First 3 topics requested from CBAA's advisory center by dairy cattle farms in Aydın

Topics of advisory services	Responses	
	Nb. of farms	Percent of Cases
Product quality and hygiene	218	49.1%
Feeding management	215	48.4%
Herd health management	172	38.7%
Breeding program	77	17.3%
Heat detection	65	14.6%
Record keeping	45	10.1%
EU milk production rules	25	5.6%
None	12	2.7%
Bookkeeping and farm economics	9	2.0%
Other	8	1.8%
Animal welfare rules	5	1.1%
Toplam	**444**	**100%**

3. CHAPTER

Agricultural Advisory System in the EU

Assist. Prof. Dr. Marija KLOPČIČ

3.1 Introduction

The Farm Advisory System (FAS) aims at helping farmers to better understand and meet the EU rules for environment, public and animal health, animal welfare and the good agricultural and environmental condition. The FAS is a system advising farmers on land and farm management. The setting-up of the FAS is an important element of the 2003 **Common Agricultural Policy** (CAP) reform. The advisory activity has to cover at least the **statutory management requirements** (SMR) and the **good agricultural and environmental conditions** (GAEC) included under the scope of *Cross-Compliance* that farmers benefiting from CAP payments have to respect. The FAS has been introduced in order to help farmers to *"meet the standards of modern, high-quality agriculture"*. Therefore, MS have to establish a comprehensive system offering advice to commercial farms. Recital (8) of Regulation (EC) N° 1782/2003 specifies that *"The Farm Advisory System should help farmers to become more aware of material flows and on-farm processes relating to the environment, food safety, animal health and welfare"*. The FAS aims at least helping farmers to be compliant with Cross-Compliance, although, as the term "at least" mentioned in the Regulation suggests, the FAS cannot be solely limited to SMR and GAEC. The FAS could serve as a horizontal tool covering broader CAP issues.

Agricultural extension work has a venerable, albeit largely unrecorded history. It is a significant social innovation, an important force in agricultural change, which has been created and recreated, adapted and developed over the centuries. Its evolution extends over nearly four thousand years, although its modern forms are largely a product of the past two centuries. Today, the organizations and personnel engaged in agricultural extension encompass a diverse range of socially sanctioned and legitimate activities, which seek to enlarge and improve the abilities of farm people to adopt more appropriate and often new practices and to adjust to changing conditions and societal needs.

Agricultural advisory (extension) services are a vital element of the array of market and non-market entities and agents that provide critical flows of information that can improve farmers' and other rural peoples' welfare. After a period of neglect, agricultural advisory services have returned strongly to the international development agenda. Apart from their conventional function of providing knowledge for improved agricultural productivity,

agricultural advisory services are expected to fulfill a variety of new functions, such as linking smallholder farmers to high-value and export markets, promoting environmentally sustainable production techniques, and coping with the effects of different health challenges that affect agriculture (Anderson, 2008).

Providing and financing agricultural advisory services in an efficient and sustainable way is confronted with major difficulties, which are associated with:

- the scale and complexity of extension operations;
- the dependence of success in extension on the broader policy environment;
- the problems that stem from the often less than ideal interaction of extension with the knowledge generation system;
- the profound problems of accountability incentives of extension employees both upward (to the managers) and downward (to their clients, particularly female farmers);
- the oftentimes weak political commitment and support for public extension;
- the frequent encumbrance with public duties in addition to those related to knowledge transfer;
- and the severe difficulties of fiscal unsustainability faced in many countries.

Moreover, as many factors affect the performance of agriculture in complex and contradictory ways, it is difficult to trace the relationship between extension inputs and their impact at the farm level and beyond, so that commitment by public and other investors is often problematic.

A number of specific formats of extension operations emerged over recent decades in endeavors to overcome these widely acknowledged problems. These newer (and now, for some, not so new) approaches, which depart from the traditional public service models, entail institutional innovations and reforms, often pluralistic, where specific design features reflect attempts to overcome weaknesses inherent in earlier public extension efforts (Anderson, 2008).

New approaches of providing and financing agricultural advisory services include decentralization to lower levels of government, involving farmers' associations and non-governmental organizations, contracting-out of extension services, public-private partnerships, privatization, embedding advisory services in other types of contracts, and broadening the types of advisory methods applied, including the use of modern information and communication technologies. The decentralization of extension services retains the public delivery and public funding characteristics of traditional centralized extension, but transfers the responsibility for delivery to local governments (district, county, etc.) in diverse ways.

Farmers' organizations can play an even more important role in approaches to devolution when extension functions become the responsibility of farmers' associations, rather than being just devolved to local governments. This approach is likely to have a greater impact on accountability, as the employer represents even more closely the clientele, and thus the

incentives for higher quality of service are better. Decentralization and devolution may also be associated with the contracting out of extension services to private providers and non-governmental organizations (NGOs). Another approach to involve the private sector is that involving public-private partnerships, where a private company and a public agency jointly finance and provide advisory services.

Agricultural extension and advisory services play an important role in agricultural development and can contribute to improving the welfare of farmers and other people living in rural areas. Anderson (2008) defines the terms agricultural extension and advisory services as *"the entire set of organizations that support and facilitate people engaged in agricultural production to solve problems and to obtain information, skills and technologies to improve their livelihoods".*

Extension services can be organized and delivered in a variety of forms, but their ultimate aim is to increase farmers' productivity and income. According to Anderson and Feder (2003), productivity improvements are only possible when there is a gap between actual and potential productivity. They suggest two types of 'gaps' contribute to the productivity differential – the technology gap and the management gap. Extension can contribute to the reduction of the productivity differential by increasing the speed of technology transfer and by increasing farmers' knowledge and assisting them in improving farm management practices (Birkhaeuser et al., 1991). Additionally, extension services also play an important role in improving the information flow from farmers to scientists (Birkhaeuser et al., 1991; Anderson, 2008).

A wide range of factors is likely to influence effectiveness of agricultural extension services. Figure 3.1 presents the basic elements of the causal chain from extension service delivery inputs through indicators of service quality, farmer uptake and agricultural outcomes, together with the underlying characteristics of extension services and contextual factors influencing knowledge acquisition, uptake and effectiveness.

Figure 3.1 Causal model and characteristics of extension services and underlying conditions influencing uptake and effectiveness

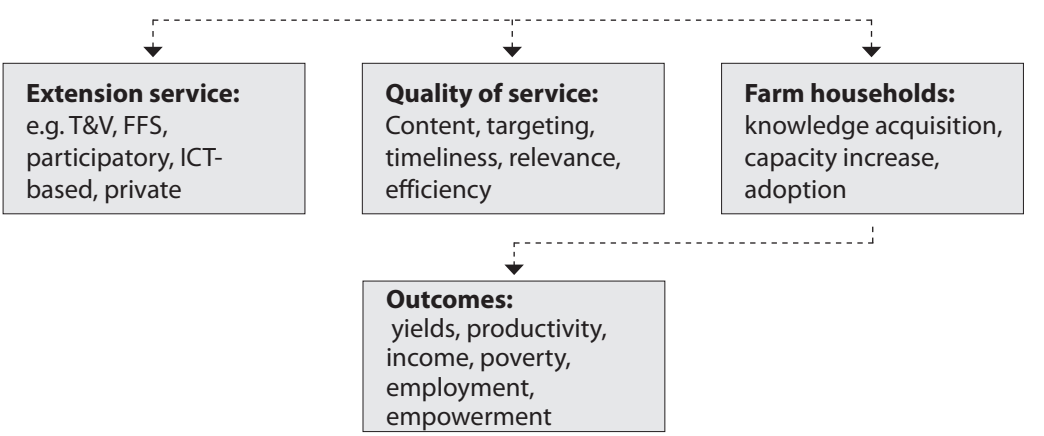

Characteristics of extension services:

Advisory method:

- Types of training or technology transfer:
  demonstrations, field days, courses, farmer-to-farmer diffusion
- Number of clientele: individual, group-based, mass approaches
- Involvement of clients in planning and problem-solving ("top-down" vs. participatory methods)
- Education orientation: social, cognitive
- Content: limited to specific crops/ livestock or dependent on needs identified by clients
- Types of media: training, radio, drama, newspaper, ICT

Governance structures:

Role of public-private sectors in financing/provision; decentralization

Capacity and management:

Number of advisers (staff-farmer ratio); training level; management of system.

Contextual factors:

Policy environment (objectives):

Orientation (e.g. growth vs. poverty reduction, high-value vs. staples); budget

Farming system:

Potential productivity; types of crops/ livestock

Access to markets:

Inputs and outputs

Community:

Land availability/distribution; education levels; conflict; gender

External factors:

Agro-ecological climate; weather events

Source: Birner et al. (2006).

3.2 Legal Basis

The 2003 CAP reform introduced the Cross-Compliance mechanism that links direct payments to compliance by farmers with basic standards concerning the environment, food safety, animal and plant health and animal welfare, as well as the requirement of maintaining land in good agricultural and environmental conditions (GAEC). The introduction of this mechanism was accompanied by an obligation for Member States to set up of a **Farm Advisory System (FAS)**, which aims at helping farmers to better understand and meet the EU rules for environment, public and animal health, animal welfare and the GAEC. In this respect, national authorities had the obligation as from 2007 to offer their farmers advice under a FAS, applying certain priority criteria if needed (Council Regulation 73/2009). The rural development policy supports farmers to make use of advisory services and supports

Member States in setting up new farm advisory services where needed.

The Farm Advisory System covers the overall organization and the **various public and/ or private operators** that deliver farm advisory services to a farmer in a Member State (see Article 12 of the Council Regulation 73/2009). The existence of a national FAS guarantees that each farmer can seek and receive advice on at least the basic *Cross-Compliance* requirements in the field of the environment, public health, animal and plant health, animal welfare and GAEC. A farm advisory service assesses the specific situation of the farmer and gives appropriate advice.

The Farm Advisory System (FAS) in EU has been gradually introduced since 2005 and Member States were obliged to introduce it from January 2007. Possible support from the European Agricultural Fund for Rural Development (EAFRD) for the use by farmers and forest holders of management and advisory services, and for the setting-up of farm management, farm relief and farm advisory services for farmers and of Forestry Advisory Services (FoAS) for forest holders is foreseen under Regulation (EC) Nº 1698/2005.

Two measures are available for the MS to be possibly included in national/regional RDP:

- *measure 114* supporting the use of advisory services by farmers and forest holders (art. 24) and
- *measure 115* supporting the setting-up of farm management, farm relief and farm advisory services for farmers and of FoAS for forest holders (art.25).

Following recitals 18 and 19 of Reg. 1698/2005, the objective of these measures is to help farm and forest holders to improve the sustainable management and overall performance of their holdings. The two measures are part of a number of axis 1 measures, dealing with competitiveness of the agricultural and forestry sector. They aim, together with other measures, more specifically **promoting knowledge and the improving human potential.** In particular, activities carried out in the context of *measure 111* (vocational training and information action) could cover issues also targeted by advisory activities.

When advisory activities are funded through the EAFRD, the minimum coverage of these activities is broader than what is stated in Regulation (EC) N° 1782/2003 (occupational safety standards based on Community legislation in addition to SMR and GAEC), as well as the targeted beneficiaries (farm and forestry holders versus commercial farms). This has been changed by Article 12 of Regulation (EC) No 73/2009. Member States may determine, in accordance with objective criteria, the priority categories of farmer that have access to the farm advisory system.

In addition, detailed capacities are requested from authorities and bodies selected to provide advisory services, in order to be selected or accredited (see art 15(2) of Commission Regulation (EC) Nº 1974/2006). They include notably appropriate resources in terms of staff, technical and administrative capacity. Regulation (EC) N° 1782/2003 requires strict obligations in terms of data protection from advisors and advisory bodies.

Regulation N° (EC) 1974/2006 (when EAFRD is used for co-funding of Farm Advisory Services) in Art 15.2 define: … *the authorities and bodies selected to provide advisory services to farmers shall have appropriate resources in the form of qualified staff, administrative and technical facilities and advisory experience and reliability with respect to SMR, GAEC and occupational safety standards.*

Advice does not start from scratch: national or regional extension and advisory systems have a long history. Systems informing farmers of various pre-existing requirements existed prior to FAS. Complementary to national or regional extension services, the 2000-2006 RDP (European Agricultural Guidance and Guarantee Fund (EAGGF) funded), already identified a *"…particular effort…to educate farmers in and inform them of agricultural methods compatible with the environment"* and a need for adequate training in *"new approaches to management, production and marketing". Ad hoc Farmers Advisory Services* were thus provided in some Member States in relation to agri-environmental measures and environmental planning at farm level.

At Member State level the advisory system and the services provided are interwoven with pre-existing agricultural extension services, certification systems, other business advisory services, information channels, and so forth (as suggested in Figure 3.2). Advising farmers in relation to the Common Agricultural Policy is thus ultimately a combination of these three levels: pillar one referring to FAS, pillar two and the existing MS extension services.

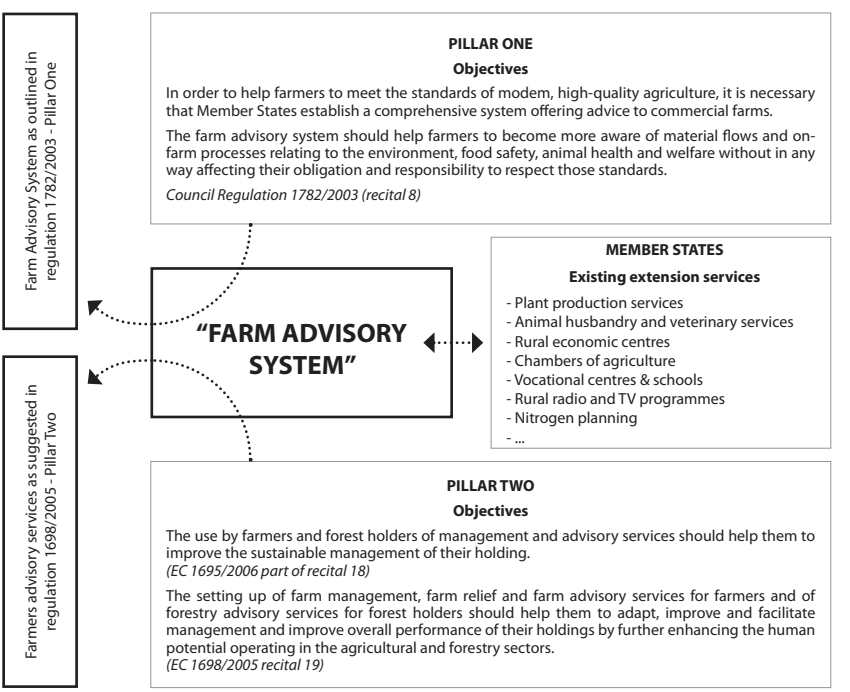

Figure 3.2 FAS interactions between Pillar One, Pillar Two and existing Extension Services (ADE-ADAS-AGROTEC-Evaluators: Evaluation of the Implementation of the Farm Advisory System)

In this context, when considering the setting-up and implementing FAS, the following key elements have to be considered:

- The field of the FAS-advice is at least "the whole" cross-compliance requirements at farm level.
- If EARFD funds are mobilized under pillar two, in addition to the scope of cross-compliance, occupational safety standards based on Community legislation have also to be covered as a minimum requirement.
- FAS can be operated by one or more designated authorities or by private bodies and therefore is defined as a system rather than specific services.
- MS have the possibility to enlarge their FAS framework to other standards, such as other good farming practices (even larger than GAEC) and standards relating to agrochemicals, or any other Community or national relevant standards.
- Advice and compliance control must remain separate, the farmer bearing the ultimate responsibility for his actions in relation to cross-compliance, as indicated in the following box:

Table 3.1 Summary table for FAS components

Advisor	Farmer	Controller	Member States
Helps farmer with advice	Responsible for his actions has to understand the requirements	Controls can lead to sanctions	Have to inform farmers about the requirements included in the scope of cross-compliance

Personal or individual information and data obtained during advisory activities cannot be disclosed, with the exception of irregularities and infringements covered by an obligation laid down in Community or national law.

Agricultural advisory services can also be considered as a component of an "Agricultural Innovation System" (AIS). AIS is based on the "National System of Innovation" (NIS) concept, which is widely used to guide science and technology policy in OECD countries. The NIS concept was first developed in evolutionary economics and emphasizes the role of a wide range of factors that influence innovative activity and innovative performance in an economy. Next to investments in research, such factors include, for example, human resources development and the climate for entrepreneurial behavior. Applications of the NIS concept to the agricultural sector in developing countries emphasize the role of partnerships among a wide range of stakeholders beyond agricultural research, agricultural advisory services and agricultural education. Other partners in an AIS include, for example, input suppliers, processors, export companies, non-governmental organizations and the media, which may all be involved in the development of innovations in the agricultural and food system. Due to

changes in the global agricultural and food system caused by factors such as the increasing demand for high-value products and the rise of supermarkets, the role of agribusiness enterprises and other private sector actors in the agricultural innovation system deserves special attention. Considering this wider range of stakeholders, an "Agricultural Knowledge and Information System for Rural Development" (AKIS/RD) can be considered as a sub-system of AIS, as illustrated in Figure 3.3.

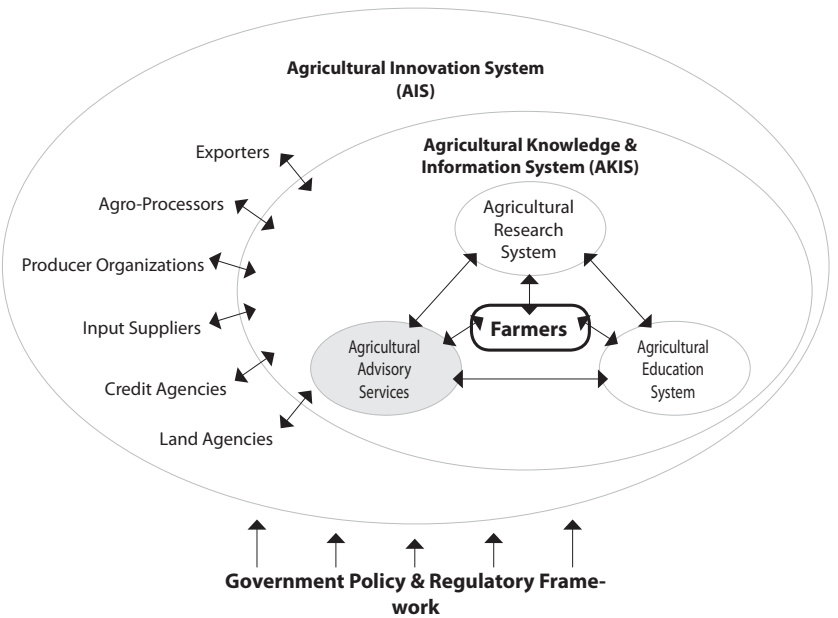

Source: Adapted from Rivera et al.(2006)

Figure 3.3 Agricultural Advisory Services as Component of an Agricultural Knowledge and Innovation System

From an AKIS and an AIS perspective, the role of agricultural advisory services is to help economic and social agents to develop individual and social skills to better identify their constraints or emerging opportunities, to design strategies to address them and to act according to these strategies. The following analytical framework acknowledges that agricultural advisory services are part of a wider knowledge and innovation system, and pays due attention to the linkages between advisory services and other components of AKIS/AIS. However, its primary purpose is to "zoom in" on agricultural advisory services in order to guide research that deals specifically with this component (Birner et al., 2006).

3.3 Member State Implementations

The structure and organization of the FAS among the Member States is characterized by a high diversity and complexity. Indeed, each country has its own extension service history and Regulation (EC) N°1782/2003 left the countries free to choose the organization of the

system most appropriate to their needs and characteristics. Therefore, most Member States assigned the competence for setting-up FAS and coordinating it to the local Ministry of Agriculture or to a designated agency or center within or outside the Ministry by January 2007.

Three main kinds of situations regarding Operating Bodies (OB) have been distinguished:

- public bodies,
- private bodies and
- a mixed context (public and private bodies), with an additional distinction between private profit and non-profit bodies.

The cost of advice to farmers was seen as an essential element in understanding the outcomes of the FAS. This cost element has been limited to the cost of one-to-one advice on the farm, as most other Farm Advisory Tools (FAT) are provided free of charge:

(i) off-farm one-to-one is most of the time linked to other extension opportunities such as advisors' sitting days, agricultural fairs etc.;

(ii) small groups, have not been reported in all countries and are quite often also provided free of charge;

(iii) most other FAS approaches (web sites, publications and telephone helpdesks) are provided by the FAS national coordinator and access is free of charge.

Three kinds of situations regarding the costs of advice to farmers are distinguished:

(1) The service is completely free of charge to farmers (5 MS: BG, CY, LV, RO and SL),

(2) Farmers have to pay a fee (flat rate or subsidized through national or European funding) (15 MS),

(3) Farmers have to pay the 'full price' of the advice. The latter situation is only encountered in two MS (DK and IE).

The use of EAFRD funds has foreseen the possibility to support the use or the setting-up of the FAS through *measures 114 and 115* of Regulation (EC) N°1698/2005. *Measure 115* has not been widely used, only by six MS and not always for setting-up the FAS. Only Spain, Italy and Portugal have significantly mobilized the measure. *Measure 114* supporting the use of advisory services at farmers' level has been much more widely mobilized by 15 MS at national level and by 4 MS in some regions. Eight MS have not contracted it at all. The volume of funds mobilized by country varies significantly between Member States, with Poland, Italy and Spain together mobilizing approximately 70% of the total allocated funds.

Table 3.2 summarizes the four criteria of the typology analyzed for all Member States, namely the status of operating bodies, the cost for farmers and the use of *measure 114 or 115*.

Table 3.2 Summary table of the 4 criteria (the status of operating bodies, the cost for farmers and the use of *measure 114 or 115*) for each Member State

	Operating body status	Cost for farmers	*Measure 114*	*Measure 115*
AT	Mixed (private/ public)	Mixed	No	No
BE	Several systems	Several systems	Differs upon region	No
BG	Public	Free	No	No
CY	Public	Free	Yes	No
CZ	Mixed (private/ public)	Mixed	Yes	No
DE	Several systems	Several systems	Differs upon region	Differs upon region
DK	Private profit	Real costs	Yes	No
EE	Private mixed (profit/non-profit)	Mixed	Yes	No
EL	Private mixed (profit/non-profit)	Mixed	Yes	No
ES	Several systems	Several systems	Yes	Yes
FI	Private mixed (profit/non-profit)	Mixed	No	No
FR	Mixed (private/ public)	Mixed	No	No
HU	Mixed (private/ public)	Mixed	Yes	No
IE	Mixed (private/ public)	Real costs	No	No
IT	Several systems	Several systems	Differs upon region	Differs upon region
LT	Private non-profit	Mixed	Yes	No
LU	Mixed (private/ public)	Mixed	Yes	No

	Operating body status	Cost for farmers	*Measure 114*	*Measure 115*
LV	Private non-profit	Free	Yes	No
MT	Private mixed (profit/non-profit)	Mixed	Yes	Yes
NL	Private profit	Mixed	Yes	No
PL	Public	Mixed	Yes	No
PT	Private non-profit	No info	Yes	Yes
RO	Public	Free	No	No
SE	Mixed (private/ public)	Mixed	No	No
SK	Mixed (private/ public)	Mixed	Yes	No
SL	Mixed (private/ public)	Free	No	No
UK	Several systems	Several systems	Differs upon region	Differs upon region

Source: ADE – ADAS – AGROTEC- Evaluators.EU, 2009

The Table 3.2 clearly shows the complexity of grouping Member States into a number of homogeneous classes representing the different ways of setting-up and implementing FAS, as each country (and/or region) has different characteristics that do not converge into homogeneous groups.

Some examples of FAS in some EU countries are described below.

Farm Advisory System in AUSTRIA

Agricultural Advisory Service in Austria is driven by Chambers of agriculture. The chambers of agriculture have two major functions:

(i) lobbying to represent and defend their members' interests and

(ii) provision of specialized services to the farmers, which include advisory services and facilitating the preparation of farmers' request for RDP subsidies and their subsequent handling.

The latter is subcontracted to the chambers by the various Länder governments and the former is organized through specific 4-to-6-year contracts from the federal government. Farmers receive general advice free of charge (directly subsidized by the Government).

Specialized advice is personalized and is available at full cost to the farmers. The Chamber of agriculture is structured around one federal chamber, 9 Länder chambers and 80 local chambers, mobilizing a total of ± 2000 persons. They are also in charge of lifelong learning programs and basic farming education.

The DANISH Agricultural Advisory Service - Farmers are both owners and users

The advisory system has a long history in Denmark, and the Danish farmers have a lot of highly specialized advisers to help them with all the issues of farm management. The Danish Agricultural Advisory Service (DAAS) is a partnership made up of 60 local advisory centers and a national center. The unique two-level advisory system is both owned and used by Danish farmers. The partnership employs app. 3,400 professionals. DAAS's history dates back to around 1875 when farmers' organizations started to employ their own advisers. Today, DAAS is one of the leading Agricultural Advisory Services in Europe. The National Centre is located just outside Aarhus in Jutland. They employ a staff of app. 500 who are organized into departments according to professional expertise.

The role of the National Centre is to create, gather and make use of knowledge from home and abroad. They carry out these tasks in co-operation with local advisory centers from across the country. The National Centre is organized in departments incorporating Crop Production, Danish Cattle Federation, Economics and Law, Pig Production, Building and Technique, Horses, Fur Animals, Poultry and Agricultural Education.

The principal function of the National Centre is to provide knowledge and service from the national departments to about 60 local advisory centers, which are distributed throughout Denmark. These centers, which are owned and managed by the local Farmers Unions under Danish Agriculture, the main organization of Danish farmers, give farmers direct advice on technical, economic, educational and social issues. About 80 % of all Danish farmers use this advisory system.

The Knowledge Centre of Danish Agricultural Advisory Service (DAAS) is the main supplier of professional knowledge for the agricultural professions. Farming is a profession where the development is moving very quickly and where acquisition and implementation of new knowledge and new techniques constitute the difference between success and failure. The role of DAAS is to process and convey the latest knowledge from research institution, companies and educational institutions and others – to their clients. Their clients are primarily the 31 advisory centers that they are closely connected to Danish Agricultural Advisory Service, but also include food businesses, authorities and agricultural colleges. In a few areas, they also have farmers and other agriculturalists as their direct clients.

This places the Knowledge Centre in a key role:

- **They bridge the gap**

  The Knowledge Centre makes knowledge ready for use. They take the results from research and process and convey them, making it possible for the advisers of the advisory centers and thus eventually the farmer to use the results in operations. This mainly takes place through their unique professional database called Landbrugsinfo.

- **They develop**

  The Knowledge Centre develops and maintains a number of IT tools for management and support for decision-making. In addition to this, they carry out development work within the breeding area as well as quality concepts for the raw materials of the farmer. The Knowledge Centre also develops and carries out national as well as transnational projects, for example within the environment field.

- **They carry out trials and studies**

  They carry out a number of trials and studies – alone or in co-operation with other institutions and knowledge companies. The annual national trials in the crop production field are one example. They are carried out in close co-operation with the advisory centers and each year they create new knowledge for the benefit of crop producers.

- **They give advice**

  The Knowledge Centre has a number of the most outstanding experts within many agriculture-related fields. This makes the Knowledge Centre an ideal "service station" for the advisers at the advisory centers, who are thus able to get quick and concrete answers. Furthermore, they advise producers in a number of minor production areas.

- **They provide education and in-service training**

  They develop and co-ordinate short and long training courses for employees at all levels of the Danish Agricultural Advisory Service. This takes place under the auspices of the DLBR Academy, which is located at the Knowledge Centre. Furthermore, the Knowledge Centre helps co-ordinate agricultural education and publishes text books used in agricultural education.

- **They handle operation and service tasks**

  The Knowledge Centre is responsible for a number of centralized service tasks. Livestock recording and output control is administered from the Knowledge Centre. They collect and process data and administer a number of joint databases for the Danish Agricultural Advisory Service. The Knowledge Centre is also the place for a number of other joint activities within the Danish Agricultural Advisory Service.

Farm Advisory System in ESTONIA

The Ministry of Agricultural certified 15 county advisory centers in 2005. Most of these centers are related to producers' and farmers' unions. The basic duty of an advisory center is to advice on cross-compliance and on other agricultural problems, to offer broader information and trainings, to help finding the necessary information and to "read" legal acts, introduce and distribute printed material and organize information events.

Farm Advisory System in FRANCE – Local and regional networks

The pre-existing system is based on very specialized (i.e. crops, cattle, environment, and accountancy) bodies, whereas most of farms need more global advice (on cross-compliance,

management-strategies, ...). Local organizations have been asked to pool their competences into networks called "réseaux de competences". There are from 0 to 12 accredited "network" per region; however networks can work in one or more regions (as long as all DRAF concerned have accredited them) and for one specific area there can be several networks accredited. A network can be composed of one body to several bodies (until 153 like in Pays de la Loire); they have to provide in-house all competence to address all on cross-compliance issues (and of all agricultural production on the concerned area) and ensure appropriate coordination between network members (ADE – ADAS – AGROTEC- Evaluators.EU, 2009).

Agricultural Advising in France is handled by agricultural chambers, which supervise the activities of various advising agencies. Although advisory activities are co-ordinated by the state, its role in financing these activities is minimal. One of the most active institutions is the Association Departementale pour l'Amenagment des Structures des Exploitations Agricoles (ADASEA), which as an institution supporting agriculture and rural areas, with its 84 field stations is similar to Poland's Agricultural Advisory Centers (ODR) in its organizational structure. ADASEA representatives ensures a complex service to the beneficiary starting from granting of useful information through the preparation of necessary documentation to relevant institutions as well as the securing of investment loans.

Tasks undertaking by ADASEA include the following:

- Advising through information, training, news articles,
- Personal advising in such areas as starting and modernizing a farm,
- Assistance in preparing documentations needed for the realization of CAP,
- Introducing advisory programs related to environmental protection,
- Diversification of agricultural activities including rural tourism etc.

Financing for advisory services is mainly sourced from membership fees and from direct payments for advices given. In observing experiences of France's institutional systems that support agricultural and rural development a tight co-existence between agricultural advisory institutions, CAP implementing institutions and banks can be noticed (Miś, 2007).

Farm Advisory System in GERMANY

Agricultural Advisory Services in Germany is the pre-occupation of several institutions and organizations, both public and private (Miś, 2007). These include advisory agencies, agricultural chambers, advisory societies, agricultural unions, producers' co-operatives and private firms. Authorities of various regions are responsible for the proper functioning of Advisory Services while the Federal Ministry of Agriculture co-ordinates and supervises their services. Patterns of advisory services however differ in the 16 regions (lands):

- State-run–public advisory organizations administered by advisory agencies subservient to the Federal Ministry of Agriculture dominate the area. Basic advisory and consultative services are free of charge. The increasing role of farmers' financed

advisory services is however being preferred for example in Baden-Württemberg, Bavaria, Hessen, Rhineland and Saxony.

- Local Authorities – created by farmers and under the supervision of agricultural chambers. 10 to 50% of finances for chambers of agriculture are from the Lands' budgets while the rest is made up membership fees and direct payments for advisory services as can be observed in Bremen, South Saxony, Hamburg, Rhine area – Westphalia, Schleswig-Holsteins.
- Private (Commercial) – It is based partly on financial assistance from governments of federated lands but substantially from payments by farmers for advisory services. Private advisory agencies take benefit of funds from the Lands only for the realization of specific tasks. Private advising is undertaken by trade unions, limited liability companies, industrial and commercial enterprises etc. in areas as Berlin, Mecklenburg, Brandenburg, Saxony Anhalt, Thüringen.

The most vital tasks realized by advisory institutions in Germany include the following:

- Assistance to farmers to enable them function in market economic conditions,
- Promoting entrepreneurial development, including rural tourism,
- Improving technology, practices and organization of production,
- Protection of the natural environment, nutritional safety, etc.

Farm Advisory System in HUNGARY

Technical Advice Centers (TAC) makes advisory service contracts with farmers and completes the service via registered advisors. There is no geographical limit; they can undertake assignments at any part of Hungary. They have to coordinate a network of (on average 12) contracted individual advisers, from anywhere in Hungary as long as they are registered with MARD. Each adviser can work for one or more TACs. Each year, there are random on sight evaluations and approximately 25 percent of the TACs are yearly checked.

Farm Advisory System in IRELAND

Worthy of attention also is the Irish advisory system managed by TEAGASC, a national institute directly supervised by the Department of Food and Agriculture. TEAGASC is not only involved in advisory activities but also in research activities and in managing schools of agriculture. Private consultancy firms, mainly involved in technological advising and assistance in drawing up business plans also provide advisory services besides TEAGASC. Advisory services offered by TEAGASC like other institutions are payable and its main tasks include the following:

- Agricultural development through the application of new technologies as well as increasing their competitiveness,
- Supporting rural development, including the diversification of agricultural production,

- Development of a balanced agriculture,
- Dissemination of information and training in quality standards, etc.
- Offices of TEAGASC can be found in every county, where they implement programs like "TEAGASC County …… Business Plan", often covering several years for example 2007-2013 (Miś, 2007).

Farm Advisory System in the NETHERLANDS - From associative to public and back to private

The decision in 1986 to separate policy formulation and implementation resulted in reorganization of the public extension service. In the second half of the 1990s, the Minister of Agriculture introduced the principles of demand driven extension and user payment. The user-pays principle implied that end-users are responsible for obtaining technical and social-economic advice concerning their enterprises. At present, the extension system is part of a wider Dutch Agricultural Knowledge Information System (AKIS) composed of the following major actors:

- A series of external services or facilities such as a general agri-window (MoA LNV-Loket) and specialized thematic websites.
- Privately owned and operated advice providers, of which the most important is the privatized and restructured DLV, composed of five Business Units
- Wageningen University (Wageningen UR) jointly managed with the research division, privatized as "Stichting DLO".
- Two specialized environmental related Information and Knowledge Centers (IKC)

Farm Advisory System in POLAND

The advisory system in place in Poland embodies 2 structural organizations with the first, the Center for Agricultural Advising in Brwinów together with its branches in Kraków, Poznan and Radom controlled by the Minister of Agriculture and Rural Development. The other supervised by the Voivodship are the Provincial Centers for Agricultural Advising. There is also the Social Board of Agricultural Advising that is a consultative and advisory body.

Polish advisory organs support the attainment of goals in agriculture and rural areas such as:

- Assisting farmers and rural dwellers in their attempts to secure financial assistance within the EU CAP and structural policies framework,
- Improving the quality of agro-food products,
- Promoting regional and local products,
- Analyzing markets for agro-food products and production inputs,
- Protecting the natural environment and production of healthy food,
- Activating non-agricultural developmental activities of rural areas, etc.

The advisory tasks are part of the strategic goals for agriculture and rural areas as contained in the National Development Program 2007-2013. Agricultural and rural development assistance is contained in the Sector's Operational Program as well as in the Rural Development Plan. Although the capacity for financial support is huge, it is still doubtful if it will be fully utilized. This of course depends on the farmers' awareness of necessary requirements for applying for financial assistance and their skills in preparing application documents. This is where the inevitable role of agricultural advisory institutions comes in, especially in providing education, information and advisory services to farmers in these aspects. In aspects, relating to the functioning of CAP during 2006-2013, the main function of advisory institutions in the future would be assisting rural dwellers in their effective utilization of EU funds.

Farm Advisory System in the Republic of SLOVENIA

The Agricultural extension and advisory service has a long tradition in Slovenia. Already in the 19th century, agricultural societies and co-operatives provided advice to farmers and thus functioned as early extension structures. After World War II, local co-operative unions were established, which prompted the extension services to work on a more professional and regular basis. In the 1960s, the local co-operatives and their unions were abolished and, with this, professional advisory activities were interrupted. However, in 1972 a "professional agricultural service" was formed, financed by the government, the municipalities and the farm co-operatives. In 1990, the agricultural extension service became part of MAFF (Ministry of Agriculture, Forestry and Food) and was renamed as the "Agricultural Extension Service" (AES). From 1999 on, the Agricultural Extension Service has operated under the patronage of the Chamber of Agriculture and Forestry of Slovenia in the Sector for Agricultural Extension and no longer exists as a body of MAFF. The Agricultural Extension Service is intended for farmers and all other people in rural areas. The Agricultural Advisory Service acts in accordance with the basic goals of Slovene Agricultural Policy, which have been defined in the Strategy of Development of Slovenian Agriculture, Program of Reform of Slovene Agricultural Policy and other strategic documents.

The AES has regional offices throughout the country, which are incorporated in the Regional Agricultural and Veterinary Institutions. Altogether, the AES employs a total of around 300 agricultural experts of which 180 are active in the fieldwork, around 80 are specialists and 50 household and social advisors, with the remainder employed in the administration. There is approximately one adviser per 300 farms and 1,500 hectares of the UAA. Field advisors provide general advice and if necessary, involve specialists from the regional office. Specialist teams are structured according to the prevailing regional production patterns. There is usually one specialist in farm economics and management. The range of activities of the AES includes:

- training of farmers and their family members through lectures, courses, direct personal advice or through publications and mass media,

- organization of professional events, such as exhibitions, presentations, demonstrations and field trips,
- design of development and investment programs based on new farm management methods, introduction of supplementary activities on farms and development of programs for organic farming,
- promotion of producers associations,
- advisory activities concerning data collection required for the Farm Accountancy Data Network (FADN),
- educational training within the Slovenian Agricultural and Environmental Program, implementing EU standards and cross compliance,
- provision of help with recording data for applications concerning direct payments,
- advisory assistance and providing aid with measures of the CAP.

The main tasks of Agricultural Advisory Service are:

- **consulting in the fields of technological, economic and environmental aspects of agriculture,**
- consulting and help with the development of farm developments plans (investments, business plans for RDP funds and/or bank loans, working in the regional developments programs …),
- **supporting the introduction of agricultural policy,**
- consulting and helping the organization and work of breeders' organizations, producers' organizations as well as other forms of organizations of farmers,
- performing programs of national importance based on special agreements.

In the rural areas, there are various Enterprise and Development Centers, which collaborate to prepare and to implement local development strategies and local capacity building. They prepare different workshops and seminars and implement development projects for local stakeholders. A great role is played by specialized agricultural stores, co-operatives and agricultural companies, which provide presentations and lectures for farmers.

Among the wide range of activities provided by AES, the greatest attention is paid to technological measures in agriculture, preparing investment and development plans, and providing help with application forms for direct payments.

The Agricultural Extension and Advisory Service represent the key factor for educating farmers and their family members in rural areas, especially the remote ones where agriculture is the main economic activity. The role of the Agricultural Extension Service has changed after the reform of agricultural policy with the introduction of subsidies and compensatory allowances. Supporting farmers by helping them with application forms for direct payments and preparation of development and investment plans has become one of the most important tasks of the Agricultural Extension Service.

Regional development agencies and other development and enterprise centers, as well as agricultural schools and the AES, play an important role in technology transfer into rural areas. They provide support in informing, consulting and educating in the field of entrepreneurship. Linkages between different development agencies are the most visible in the preparation and implementation of local development strategies, which are based on endogenous development potential and find their place in the Rural Development Plan for Slovenia 2007-2013 carried out through LEADER. The LEADER approach stimulates capacity building, establishes public-private partnerships and creates co-operation among local populations in rural areas (Cor et al., 2006; Bedrac & Cunder, 2007; Kotnik & Levart, 2008).

Farm Advisory System in UNITED KINGDOM - Ensuring linkages through specialized "panels"

In England, regular (at least biannual) meetings are organized through a special panel between the key bodies involved to report on progress and discuss priorities. This Panel includes the Momenta (the consortium contractor), Defra, Natural England and the inspection bodies. Momenta are tasked with ensuring there is coordination with the events of other agencies and within its members.

In Wales: the Farming Connect program (of which FAS is a part) has four Development Centers (Dairy, Red Meat, Organic and Land Management). These centers have Knowledge Transfer (KT) officers. The interaction is that each region has monthly meetings between Welsh Assembly Government (WAG) Farming Connect staff, KT officers and FLS staff to share information and ideas on delivery and promotion of Farming Connect services, including FAS.

Northern Ireland has set up a central committee entitled the 'Helping Farmers Comply Forum (HFCF)' which co-ordinates the delivery of FAS and brings together staff involved in all aspects of Department of Agricultural and Rural Development's (DARD) work on cross-compliance and ensures that the advisory message addresses issues that arise from control (inspection) activities.

Other EU Member Countries

In some new EU member countries such as Lithuania and Latvia, there exists a semi-autonomic agricultural advisory system. The primary organization responsible for advisory in Lithuania is the Lithuania Agricultural Advisory Services (LAAS); a state owned company that was commercialized in 1998 and payment for specialized services were introduced. In Latvia, on the other hand there exists the Latvian Center for Agricultural Advising (LAAC), which was in 1997 transformed into a non-profit state owned commercial company. Its major partnerships are the Ministry of Agriculture and the Federation of Latvian Farmers. Farmers have since 1993 been paying for advisory services with those connected with obtaining loans, tax issues, and computer services being the most expensive. Besides, in other new EU member countries like Slovakia, Hungary and the Czech Republic there exists systems of agricultural advisory services run by state parastatals that charge farmers and other clients full or part

payment for certain services rendered. This notwithstanding, an increasing number of private consultancy companies has started offering payable advisory services (Miś, 2007).

Information and Advisory Services for Organic Farming in Europe

Organic farming is increasingly recognized in the European Union (EU), by consumers, farmers, environmentalists and policy-makers alike, as a possible model for environmental, social and financial sustainability in agriculture. A review of the situation in the EU (and three non-EU countries) in 1997 showed that information and advice is provided by a variety of governmental and private organizations. The organizational structure ranges from full integration into the mainstream agricultural extension institutions to total separation, and from publicly funded provision of information and on-farm advice free to organic or interested conventional producers, over self-help groups of farmers to fully commercialized expert consultancy services. Information and advice is funded by either public support, producer levies and fees, private sponsorship or a combination. In some mainly southern European countries, the organized advisory provision is still very limited.

In most countries organic producer associations, important actors in the general development of the organic sector, also provide information to producers. Their technical services range from publications (magazines, technical notes), over farm walks and open days to the employment of specialist advisors for farm visits, the later generally restricted to members only. If such organizations are the main supplier of information, access can be difficult for non-members, such as interested conventional farmers. In some countries, the organic inspectors hold a large amount of the available knowledge, but its use is hampered by the current practice of a clear separation between inspection and advice.

In a number of countries (e.g. France, Scandinavia and German speaking), the general agricultural extension services are increasingly involved in information and advice on organic farming. This can improve access to information, but there are concerns whether it covers the core principles of organic farming and is specifically adapted to the system. Having to advise on organic and non-organic production methods at the same time can lead to personal role conflicts and to a loss of credibility on the side of the advisor. Organizational structures that allow greater influence of the organic producers on the subjects covered and personal to be employed (e.g. Ökorings in Germany) and with a mixture of public and private funding sources may represent a good solution. Few countries give public support to regional and discussion groups of organic producers or networks of demonstration farms. In countries with a larger number of specialist organic advisors networks have developed, but rarely are the bodies well enough funded to ensure a good range of back-up services for the growing number of organic advisors (Padel, 2001).

3.4 Conclusions and Recommendations

The need for agricultural and rural information and advisory services is likely to intensify in the foreseeable future. In much of the world, agriculture faces the challenge of keeping

pace with rapidly increasing population with few reserves of potentially cultivable land. Farmers will have to become more efficient and specialized. From government perspectives, whatever priority is given to production, extension will remain a key policy tool for promoting ecologically and socially sustainable farming practices.

The forces for change in these areas will come from four main directions.

- Economic and Policy Climate
- Social Context in Rural Areas
- Systems Knowledge
- Information Technology

Recommendations

1) The concept of "Farm Advisory System" should be maintained. Efforts may be developed for going beyond cross-compliance requirements, where appropriate

In the first years of implementation, FAS activities have been especially focused around cross-compliance standards. However, as the concept of the FAS allows to go beyond a pure "cross-compliance approach", we see an opportunity for doing so in those MS where this basic support is less needed. Depending on the respective needs of farmers in the different MS to correctly understand and apply the requirements of cross-compliance, FAS activities could be further targeted:

a) towards an integration of cross-compliance advice with economic advice increasing the usefulness of documentary aspects that are required by cross-compliance

b) towards other needs and domains of advice (e.g. climate change, market oriented advice, etc.). This would further support the contribution of the FAS to the global objective of supporting a modern, high quality agriculture, and might enhance the overall confidence of the farmers towards the system, which is currently still considered by most farmers as being linked to cross-compliance requirements and controls.

2) Recommendations towards MS for improving the effectiveness and efficiency of the FAS

The recommendations in this area include:

2.1 Carrying out needs assessments, in order to better respond to the specific needs of the potential beneficiaries.

2.2 Exploring synergies with other instruments, in particular with agricultural research activities and other extension services.

2.3 Further develop the monitoring systems, which should also provide feedback on the issues where more advice is needed and/or on the most suitable tools for providing advice.

2.4 Enhancing the access to the FAS for small farms by developing specific FAS tools targeted to this population and by increasing the knowledge of the FAS and of its potential benefits among these farmers.

3) Recommendations towards the EC to support the MS in the implementation of the FAS

Recommendations include:

3.1 Promoting the sharing of good practices on approaches and tools among the Managing Authorities and the Operational Bodies in the MS.

3.2 Clarifying the rules concerning occupational safety standards. In this respect, two possible options could be envisaged:

1. The EC could better clarify the precise rules to be respected by the farmers in terms of occupational safety standards;
2. These standards should not be included in the mandatory scope of FAS services when *measure 114* is mobilized by farmers.

3.3 Revising the scope of *measure 114* in the sense of removing the obligation for each individual service to cover all cross-compliance standards when this measure is mobilized.

References

- Anderson, J.R. & G. Feder, 2003. 'Rural Extension Services', World Bank Policy Research Working Paper 2976, World Bank, Washington D.C. http://econ.worldbank.org/files/24374_wps2976.pdf
- Anderson J.R. 2008. Agricultural Advisory Services. A background paper for "Innovating through science and technology", Chapter 7 of the WDR 2008. World Bank, 44 p.
- Bedrac C. & T. Cunder, 2007. Rural Technology Transfer in Transition Economies in Slovenia, D12-3 Fourth 6-monthly report. Project no. 513705 - Project Acronym »CEEC AGRI POLICY« - Agro economic policy analysis of the new member states, the candidate states and the countries of the western Balkan. 14 p. http://www.euroqualityfiles.net/cecap/Report%204/Section%202%20country%20report/CEECAP%20report%204%20section%202%20SLOVENIA.pdf
- Birkhaeuser, D., Evenson, R. E. & G. Feder, 1991. 'The Economic Impact of Agricultural Extension: A Review', Economic Development and Cultural Change, 39, pp. 607-650.
- Birner, R., Davis, K., Pender, J., Nkonya, E., Anandajayasekeram, P., Ekboir, J., Mbabu, A., Spielman, D., Horna, D., Benin, S. and Cohen, M., 2006. 'From "Best Practice" to "Best Fit": A Framework for Analyzing Pluralistic Agricultural Advisory Services Worldwide', DSGD Discussion Paper No. 37, IFPRI, Washington D.C. http://www.ifpri.org/DIVS/DSGD/dp/dsgdp37.asp. Published version: Journal of Agricultural Education and

Extension 15 (4), pp. 341-355, December 2009.

- Cor T., Jagodic A., Trunkelj B., Salobir–Vilar G., Filipič M., Zgonec U., Zajc M., Ocepek M., Majer D. 2006. Cross-Compliance and the Farm Advisory System in the Republic of Slovenia. Implementation Paper. Ljubljana, Agriculture and Forestry Chamber of Slovenia, Farm Advisory Sector, 2006.
- Council Regulation (EC) N°1782/2003
- Council Regulation (EC) N°1698/2005
- Council Regulation (EC) N°1974/2006
- Council Regulation 73/2009: Council Regulation (EC) No 73/2009 of 19 January 2009 establishing common rules for direct support schemes for farmers under the common agricultural policy and establishing certain support schemes for farmers, amending Regulations (EC) No 1290/2005, (EC) No 247/2006, (EC) No 378/2007 and repealing Regulation (EC) No 1782/2003
- ADE – ADAS – AGROTEC- Evaluators.EU, 2009. Evaluation of the Implementation of the Farm Advisory System. Final Report – Evaluation Part. December 2009. In collaboration with ADAS, Agrotec and Evaluators.EU. 213 pp. http://ec.europa.eu/agriculture/eval/reports/fas/report_eval_en.pdf
- Kotnik I. & S. Levart, 2008. Cross-Compliance and the Farm Advisory System in the Republic of Slovenia.
- Miś T. 2007. Agricultural advisory institutions on European Union countries. University of Rzeszow - Faculty of Economics. 5 p.
- Padel S., 2001. Information and Advisory Services for Organic Farming in Europe. In: 15th ESEE workshop in Wageningen, August 2001, 2 p.
- Rivera, M.W., Alex, G., Hanson, J. and R. Birner. 2006. Enabling Agriculture: The Evolution and Promise of Agricultural Knowledge Frameworks. Paper to be presented at the Conference of the Association for International Agricultural Education and Extension (AIAEE) in Clearwater Beach, Florida, May 14-18, 2006.

4. CHAPTER Advisory Systems in Turkey

Prof. Dr. İ. Coşkun CEYLAN

4.1 Past Practices

It has been one of the most important objectives to increase the quantity of agricultural production by means of informing the farmers of the modern agricultural techniques in Turkey since the establishment of the republic.

Institutions rendering services in the area of agricultural extension can be classified as follows:

- Public institutions
- Commercial enterprises
- Agricultural organizations
- Voluntary organizations.

In order to increase the efficiency and production amount in agricultural production up to the levels to meet the food needs of the increasing country population, education and extension activities which enabled farmers to utilize the advanced production techniques and methods were mainly carried out by public institutions for a long time (Tatlıdil and Ceylan, 2000).

4.1.1 Legal Basis

The concept of Agricultural Extension was firstly used in Turkey in the First Rural and Agricultural Development Congress held in 1938. A publication, consisting of 280 pages, which tells about the principles of the agricultural extension services in the United States of America (USA) was translated into Turkish and included in the publications of the Congress (Şenocak 1967).

The first Article of the Legislation on Equipment of the Ministry of Agriculture with Transportation and Technical Operation Vehicles which gained effect in 1943 specifies that the agricultural organizations, where deemed necessary, shall be provided with trucks, bicycles, cars, pack animals, machinery of any kind, tools, medicines and miscellaneous transportation and technical operation vehicles by the Ministry of Agriculture so that they could carry out the operational works by themselves in order to demonstrate them to the farmers or they could teach the farmers how to do it by having them do it. Technical agricultural centers

shall be established to function as working centers for civil servants and to ensure storage for necessary vehicles and materials. It is observed in the above-mentioned Article of the Legislation that the extension service was defined as a public service, which was assigned to the Ministry of Agriculture. (Şenocak 1967) The process for organization of the Ministry of Agriculture in district and provincial levels in line with this legislation was given start in Ankara, Eskişehir and Manisa provinces, and concluded in all provinces in 1958 (Anonymous 2004).

The extension approach adopted in those years was the "General Agricultural Extension Approach". Additionally, the Ministry sometimes embarked, to a certain extent, on "Product-based Extension Approach" and "Integrated Project Approach". Due to the fact that such service provision-oriented approaches based on technology transfer failed to take into consideration the participation, it was hardly possible for farmers to actively participate in the process (Özçatalbaş et al., 2010)

In 1984, the public departments concerning agricultural activities (Various general-budget institutions and state-owned enterprises operating under the Ministry of Food, Agriculture and Livestock Farming, Directorate for Rural Affairs and Cooperatives, Ministry of Forestry, Ministry of State and Ministry of Industry and Trade) were collected under one the roof of one single ministry with the Regulation on Establishment and Mission Principles of Central and regional Organizations of Ministry of Forestry and Rural Affairs, which was issued under the Cabinet Decrees dated 13.12.1983 no:174 and dated 8.6.1984 no: 202. (Anonymous 2004/a)

In line with the re-organization, the Agricultural Extension and Applied Research Project (TYUAP), co-financed by Republic of Turkey and the World Bank, was implemented in two parts. The first part became operational on September 5, 1984 (Anonymous, 2004/a).

In 1991, the missions of the re-organized Ministry of Agriculture and Rural Affairs were re-defined by the Decree no: 441. Accordingly, the Directorate General for Organization and Support, which is one of the main service units of the Ministry, was responsible for rendering the agricultural extension services in Turkey (Özçatalbaş et al., 2010).

4.1.2 Practices

The Agricultural Extension and Applied Research Project (TYUAP)

In the Agricultural Extension and Applied Research Project (TYUAP) grounded on engrafting the "Training and Visit Approach", which provides establishment of extension units as close as possible to the farmers including village groups and visit to be paid regularly by the extension staff deployed in the Center to the farmers and regional extension staff under their area of responsibility. (Anonymous 2004/a)

It was decided to enlarge the scope of the first part of TYUAP, whose implementation period was set to be 6 years, to ensure its implementation countrywide. The scope was

originally set to cover 16 provinces (two of these 16 provinces were divided into two new provinces in 1989 and total number of provinces increased up to 18 without any change in the project area). With an extension of the project period, the works under the first part of the project were finalized in July 1993 (Anonymous 2004).

The second part of TYUAP was implemented in 21 provinces between 1990 and 1997. Extension services have thus reached approximately half of the provinces countrywide under TYUAP (Anonymous 2004).

Within this structure, Departments of Extension and Department of Women in Rural Development, which operated under the Directorate General for Organization and Support were in charge of extension services on central level whereas the Divisions for Farmer Training and Extension Services under the Provincial Directorates were responsible in provinces and District Directorates in districts and Village Group Agricultural Centers in villages rendered farmer education and agricultural extension services (Anonymous 2004).

The Leader Farmer Project (LFP)

The first regulation on provision of extension services by non-public institutions is the Legislation on Agricultural Chambers and Agricultural Chamber Unions that gained effect in 1957. The Legislation specifies the missions of Agricultural Chambers under two headlines as "Mandatory Missions" and "Duties depending on Budgetary Constraints".

In this legislation, mandatory duties included organization of agricultural courses and winter courses and conferences to provide farmers with practical information and promotion of agricultural education.

The first initiative of Turkish Union of Agricultural Chambers (TZOB) on agricultural consultancy services took place only in 1986.

With an agreement, which was concluded by and between Turkey and Federal Republic of Germany and gained effect on 27 December 1986, the Leader Farmer Project (LFP) started.

In this project coordinated by Turkish Union of Agricultural Chambers (TZOB), Deutsche Gesellschaft für Technische Zusammenarbeit (German Technical Cooperation Institution) (GTZ) GmbH[1] and Deutsche Landwirtschafts- Gesellschaft (German Agricultural Institution) (DLG) were the cooperating organizations.

The objective of the project titled as "Supporting the Leader Farmer Working Groups" was to create an organization model in which farmers who work with their own responsibilities could jointly improve their farms in cooperation with one another, and within this framework, to implement a pilot project in Thrace region and to promote establishment of Leader Farmer working groups" (Official Gazette dated 27.12.1986)

The Leader Farmer Project was planned in three phases. The development phases of the project include:

[1] The name of the institution was changed to "Deutsche Gesellschaft für Internationale Zusammenarbeit (GIZ) GmbH" on the 1st of January 2011 after the merging between, "Deutscher Entwicklungsdienst (DED) gGmbH" and " Inwent – Capacity Building International, Germany".

1st Phase: Inception and Building-up Phase (3 years 1987-1990)

2nd Phase: Establishment Phase (3 years 1990-1992)

3rd Phase: Execution Phase (2 years 1993-1994)

The project started when the project office where two German experts worked was opened in Tekirdağ province that had the required infrastructure and agricultural potential and was selected as the pilot region.

In the first year, mostly promotional activities were carried out, and in the following years, the first consultancy group was formed along with the farmers who were interested in the city center in Tekirdağ province. The group office was well equipped and an expert to render consultancy service to the group was recruited and completed his consultancy training both in Turkey and in abroad (Anonymous, 2011).

In 1988, groups were established in Muratli and Corlu districts. The last group was established in Malkara district in 1990. All groups were given the association status until the end of the year 1992 so that they could make financial contribution and act independently. (Önder Çiftçi Consultancy Associations) (Anonymous 2011)

Examinations and inspection revealed that the most appropriate model out of the all-existing organizational models available in the country was the Association structure. The cooperative and company statuses were not found appropriate as they have commercial and profit purposes by their nature. Furthermore, there was not a given contribution fee system in these organizations and there is no possibility to make monthly payments. However, it is possible under an Association structure for the target group to create consultancy groups and to have a say in the decision-making in management of services they do provide if members pay, a given contribution fee in return for the services and receive government support (Anonymous 2011).

The associations are completely independent agricultural consultancy organizations, which operate on voluntary basis, in line with self-assistance, democracy and economic principles, and where required services are rendered by themselves (Anonymous 2011)

Membership is voluntary. Any member can leave the Association if he wishes to do so. The eligible farmers make their applications to the Board of Directors of the Association in written. The Board of Directors of the Association evaluates the application and makes a decision to accept or reject the application for membership.

Similarly, the Board of Directors of the Association can terminate membership of any member who fails to comply with the requirements of the membership or who acts in violation of the objectives of the Association. There is no limit for the number of members. However, the number of members whom a consultant can render services is limited. The ideal number of members is thus between 80 and 120 depending on the working capacity of the Consultant of the Association (Anonymous 2011)

If the Board of Directors wishes to do so, it can bring a limit on the number of members. Honorary memberships can be given upon the decision of the Board of Directors. For instance, companies providing agricultural inputs (seeds, pesticides, fertilizers, machinery etc.) can be a member to the Association. There is a mutual interest here. Companies are thus able to promote their new products to the members immediately, and farmers can easily learn about the new technologies. Moreover, companies who can closely observe what kind of problems farmers suffer from can introduce new products into the market to solve these problems (Anonymous 2011).

The project budget was originally formulated with contribution of Turkish and German governments and farmers. These institutions contributed since the inception of the project at different proportions from year to year. In 1992, Turkish government and farmers started to contribute in current costs of the associations. For six years from the inception of the project, German Government had covered all materials and equipment needs of the associations and both domestic and international trainings of consultants as well as the monthly current costs. When the project was finalized in 1996, financial assistance of the German government ended. In 1997, farmers started to contribute in expenditures by 50%. (Özer 2005) The 50% government subsidy made to the associations via Turkish Union of Agricultural Chambers ended in 2004, and all the expenditures of the association have started to be covered by the member farmers (Anonymous 2011).

Table 4.1 Leader farmer consultancy associations in Turkey (2005)

The Name of Association	Year of Establishment	Members
Tekirdağ Leader Farmer Consultancy Association	1992	161
Muratlı Leader Farmer Consultancy Association	1992	89
Hayrabolu Leader Farmer Consultancy Association	1992	85
Malkara Leader Farmer Consultancy Association	1992	86
Silivri Leader Farmer Consultancy Association	2003	89
Şanlıurfa Leader Farmer Consultancy Association	2003	54
Bafra Leader Farmer Consultancy Associations	2003	60
Osmaniye Leader Farmer Consultancy Associations	2003	60
Yüreğir Leader Farmer Consultancy Associations	2003	N/A
Şanlıurfa Agro-Gap Leader Farmer Cons. Assoc.	2000	99

Source: Özer 2005.

The Village-Centered Agricultural Production Support Project (KÖYMER)

With the winds of change, which were blowing all around the world in early 1980s, the state monopoly in many fields of agriculture started to be shaken significantly. The new trends that emerged in the world throughout that process reverberated on Turkey in late 1990s and it was then observed that the state started gradually to withdraw from the areas in which private sector started to operate and the market economy conditions started to function. Within this context, the state hardly has any function in areas such as distribution of inputs, and some practices such as beneficiaries' undertaking the repair and maintenance works of the public irrigation facilities and charging for some veterinarian services, which no one considered before, started to be realized. Despite such a structure, however, no significant step had been made in Turkey concerning the agricultural consultancy area, an area in which many changes took place all around the world in terms of provision of public services in the realm of agriculture, and the highest variety was observed from the perspective of the strategies adopted, until the KÖY-MER project (Ceylan et al., 2005).

The Village-Centered Agricultural Production Support Project (KÖY-MER), which was put into implementation by Ministry of Agriculture and Rural Affairs on the 1st of January 2004 in order to ensure procurement of consultancy services from agricultural engineers, veterinarians, aquaculture engineers and food engineers to give information to farmers in their places, to disseminate utilization of new agricultural techniques and technologies in rural areas, to ensure accurate use of agricultural inputs, to carry out activities to increase plant and animal production and to increase the income level of rural population (Anonymous 2004) is a significant step in Turkey, for the years to come, for feasibility of the "private (freelance) agricultural consultancy" system which is pretty common in developed countries (Ceylan et al., 2005)

The objectives of the project called KÖY-MER shortly that became operational on January 1, 2004 include

- Providing farmers with the information they need in a timely manner and in their places,
- Extension of effective and efficient use of agricultural technologies,
- And increasing the income levels of farmers (Anonymous2005).

Basic principles of the project are as follows:

- The project is based on the principle of efficiency and productivity in service. The basic approach is "the service to the village, peasants and farmers should be in the village".
- Agricultural consultants render their service by "residing in the village". The aim was to ensure that the Agricultural Consultants in the project were in harmony with the culture of farmers whom they did serve.
- The project is on voluntary basis. Both the Agricultural Consultants as the providers of the service and farmers in the villages and towns as the beneficiaries of the service voluntarily accept the service contract and render the relevant service accordingly.

- The project holds the principles of "subsidiarity and participation". It was planned that any village or town in need of consultancy services would receive the service from the consultant, and the beneficiaries of the service would gradually participate in the fee of the service they receive.
- As indexed to success according to performance measurements, the project defines the period and the fee for receiving the service. The results and outcomes of the service rendered by the consultants shall be measured, and contracts shall be renewed with the consultants found to be successful and satisfactory and they shall get an increase in their wages whereas those who fail to perform well shall be driven out of the system. Satisfaction of the farmers who are the beneficiaries of the service shall be essential in evaluation of the performance of the consultants working in the project.
- The practices and gains of this project will serve as a ground for trainings and the legal infrastructure when making a transition to privatization of agricultural extension services and Freelance Agricultural Consultancy system.
- Those working under the project shall render services in any phase of agricultural production in accordance with the farming calendar and the specification of the work. There shall not be any limit on working hours.
- The project shall be financed by voluntary contribution of local resources, non-governmental organizations (NGOs), real and legal persons in addition to the national budget resources. Contributors shall be entitled to asking and learning how their money is spent and to measuring the performance of the project. (Anonymous 2005)

Implementation period of the project is 3 years. Although the objective was originally 1000 consultants for 1000 villages, there can be changes in the number of consultants who will serve under the project depending on the performance of the project in 2005 and 2006 and on the developments concerning fund raising. The maximum period of a contract to be concluded with the consultants shall not be longer than 3 years (Anonymous 2005).

It will be decisive in selection of the places where consultants will work whether a village/town makes a demand upon a decision to be made by their authorized bodies to go under the scope of the project, whether there are sufficient amount of areas eligible for agricultural production or whether livestock farming is common or there is an obvious potential for livestock farming in that village or town, whether there are convenient facilities for accommodation of consultants, and whether the village/town has transportation facilities and a sufficient potential for agricultural production. Assignments have been made to villages who committed to contribute to the progress payment to be paid to the consultants by 5% in the second year and by 10% in the third year (Anonymous 2005).

Headmen of the villages and mayors of the towns have made a decision to pay the 5% contribution fee in their authorized bodies and thus issued a letter of commitment. (Anonymous 2005)

However, in the event that any village or municipality rejects to pay the contribution fee despite the commitment they have issued, it shall be possible to substitute those villages or town by new ones to be selected and agricultural consultants shall be assigned to their new service venues in the future.

Various companies and organizations financed 36% of 1023 people who worked under the project. Approximately ¼ of the total project costs were covered by Turkish Union of Chambers and Stock Exchanges (TOBB), 10% covered by the Bank of Agriculture (TC Ziraat Bankası), 1% by Turkish Union of Agricultural Chambers and again 1% by İzmir Commodity Exchange, Antalya Chamber of Commerce and Industry, Antalya Commodity Exchange, The Aegean Region Chamber of Industry and 4 private agricultural companies from Antalya province. The KÖY-MER project, which started on 1/1/ 2004, was finalized on 31/12/ 2006 (Özçatalbaş et al., 2010).

4.2 Current Situation

The organizations and institution rendering agricultural extension and consultancy services in Turkey can be classified as follows. There are, no doubt, differences in terms of the number of their beneficiaries, funding of the services and area of activity.

- Ministry of Food, Agriculture and Livestock Farming (MFAL) (The public authority directly in charge of extension)
- Organizations and institutions that are not directly in charge of extension but carry out extension activities
- Research institutes and Extension and Economy Departments affiliated to MFAL
- Non-profit organizations (Foundations)
- Extension research and implementation centers in universities
- Agricultural chambers
- Other producers' organizations (Özçatalbaş et al., 2010)

4.2.1 Legal Basis

Ministry of Food, Agriculture and Livestock Farming (MFAL)

In Turkey, the ministry was restructured in accordance with the Cabinet Decree on Organization and Duties of the Ministry of Food, Agriculture and Livestock Farming dated 3/6/2011 no:639 (O.G. dated 08.06.2011). The name of the ministry was amended under the above-said Decree as "the Ministry of Food, Agriculture and Livestock Farming". The relevant Decree specified that the duties of the Ministry of Food, Agriculture and Livestock Farming, which is restructured, should include conducting activities on major topics such as development of plant and animal production and aquaculture, conducting researches to facilitate development of the agricultural sector and formulation of agricultural policies, food production, food safety and food security, rural development, protection, preservation

and efficient use of soil, water resources and biodiversity, organization and raising awareness of farmers, effective management of agricultural subsidies and regulation of agricultural markets as well as defining and monitoring the implementation of the general policies for food, agriculture and livestock farming.

Duties and responsibilities of the Department of Education, Extension and Publications, which was established include

- Publication and extension of auditory, visual and written documents on the topics under the mandate of the ministry,
- Collection, evaluation and publication of any information and document concerning the mandate of the Ministry for educational purposes, and preparation of movies, slides, photos and similar documents, and rendering the relevant archiving, documentation and library services,
- Any training activity on any topic under the mandate of the Ministry,
- Cooperation with relevant public and private institutions and organizations concerning publications to be made on topics under the mandate of the Ministry,
- Rendering the farmers' education, agricultural extension and consultancy services,
- And carrying out similar duties assigned by the Minister (O.G. dated 27.08.2011)

The provincial departments which used to operate under the name of "Department of Farmers' Education and Extension" have been re-named as "the Department of Coordination and Agricultural Data" and many additional duties have been assigned to this department as well as farmer' education and extension services.

Non-Public Consultancy Services (Freelance Agricultural Consultancy)

The first regulation on Freelance Agricultural Consultancy Services in Turkey was the regulation on Agricultural Extension and Consultancy Services, which was put into force on 08.09.2006. Although the Article 16 of the Bylaw on Duties and Authorities of Agricultural Engineers, published in the Official Gazette in 1992, provided the Agricultural Engineers with the power to act as freelance consultants, the above-mentioned regulation has filled many gaps in implementation of the freelance agricultural consultancy (Ateş and Sayın, 2008).

This regulation ensured that non-governmental organizations, agricultural chambers, agricultural consultancy companies and farmers' organizations could also render agricultural consultancy services (Article 4/k). Article 21 of the Regulation thus lists the persons and organizations entitled to rendering agricultural consultancy services as follows:

a) Producers' organizations and agricultural chambers employing consultants within their bodies,

b) Agricultural consultancy associations/foundations

c) Agricultural consultancy companies,

d) Freelance agricultural consultants.

As per the Article 4/r in the Regulation, individuals who perform the extension services in the central and regional offices of the Ministry and in the affiliated institutions and people who are certificated in line with the provisions as per the mentioned Regulation are called "Agricultural Extension Agent".

Duties of agricultural extension agent/consultants are specified as per Article 19 of the Regulation in the following way:

a) To provide owners of farm holdings or other beneficiaries with the relevant information and skills, and to carry out agricultural practices in line with the relevant regulation if needed,
b) To convey any know-how and new technology concerning sustainable production techniques for plant and animal production to the target mass,
c) To brief the owners of farm holdings and the target mass concerning protection of environment, natural resources and biodiversity,
d) To contribute in the efforts to make farm holdings more competitive and to help them find their ways effectively to the product and service markets,
e) To render business economy extension/consultancy services and give the recommendations required,
f) To give extension/consultancy services in the fields of economic analyses, development plans, improvement and capital efficiency of businesses, family business-related problems, household economy and mechanization,
g) To give personal development and entrepreneurship trainings required for people working in agriculture to do their jobs in a better manner,
h) To participate in the trainings on the topics which he is responsible for,
i) To prepare and use printed, auditory and visual mass extension tools in extension/consultancy activities,
j) To collect data and keep records about agricultural extension and consultancy activities,
k) To ensure preparation of documents to register and control agricultural production,
l) To exert efforts in field organization of farmers.

Although the regulation originally made it compulsory to attend a 120-hour course for certification to be a Freelance Agricultural Consultant or Agricultural Extension Agent, this obligation was later removed and it was stipulated to pass an examination, which is held twice a year by the Ministry.

Article 17 of the Implementation Principles on Agricultural Extension and Consultancy Services specifies the total size of the agricultural businesses to which an agricultural consultant would render service, the maximum number of businesses allowed and the control frequencies of these businesses. Accordingly;

a) For individuals or organizations which will render agricultural consultancy service; the total size of the agricultural holdings to which an agricultural consultant would render service shall be as follows: in plant production, it shall not exceed 300 decares for green-housing, 3000 decares for field crops, 5000 decares for field agriculture (irrigated), and 10.000 decares for field agriculture (non-irrigated) whereas in animal production, it shall not exceed 1000 heads for bovine farming (dairy), 4000 heads for bovine farming (livestock), 10.000 heads for ovine farming, and 100 tones/year for aquaculture and 3000 colonies for bee-keeping.

b) The maximum number of the agricultural holdings to which an agricultural consultant can render service shall not be more than 50 for green-housing, 50 for field crops, 50 for field crops (irrigated), 70 for field crops (non-irrigated) in plant production whereas 40 for bovine farming (dairy), 80 for bovine farming (beef), 80 for ovine farming 80, 10 for aquaculture and 50 for bee-keeping in animal production. When the holdings to which an agricultural consultant renders service is a mixed one, the total area of the holdings, which he is allowed to serve, shall be calculated over the average holding size which we can find by dividing the total size defined for each breeding production type into the total number of holdings he will serve. In mixed businesses, an agricultural consultant can serve maximum 80 holdings.

c) An agricultural consultant should visit and check the agricultural holdings he serves at least once a week for green-housing, 24 times a year for horticultural crops, 15 times a year for field crops(irrigated), 12 times a year for field crops (non-irrigated), once a week for bovine farming (dairy), 24 times a year for bovine (beef), 24 times a year for ovine farming, once a week for aquaculture businesses and 24 times a year for bee-keeping.

The regulation on supporting the Agricultural Extension and Consultancy Services is "the Communiqué on Making Subsidy Payment for Agricultural Extension and Consultancy Services" dated 21.05.2009. In accordance with the mentioned Communiqué, 225-TL support payment was made per farmer/business, which purchased agricultural consultancy services in 2009. This subsidy payment amount is 500 TL for the year 2011 (O.G. dated 21.05.2009).

Farmers/holdings have to meet some minimum criteria in order to benefit from the subsidies. Here are the criteria:

a) They have to be registered into the farmer registration system and/or animal registration system and/or greenhouse registration system and/or Aquaculture registration system and/or beekeeping registration system and/or sheep and goats registration system,

b) They have to meet at least one of the following criteria:

   1) To make production on at least 3 decares in greenhouses

   2) 10 decares in field crops,

3) 100 decares in field crop cultivation (non-irrigated) and 50 decares in field crop cultivation (irrigated)
4) In livestock farming, they have to have at least 20 heads of cows for dairy farming, 50 heads of cows for beef production and 100 heads of ovine animals,
5) At least 50 bee colonies,
6) And an aquaculture production plant.

4.2.2 Practices

Public (Agricultural Extension Development Project (TAR-GEL) Practices

The TAR-GEL Project was given start on January 1, 2007 by the Ministry after the conclusion of the KÖYMER project.

When we analyze the transition from KÖYMER to TAR-GEL, it is observed that the only difference between the two practices was in that the agricultural consultants who used to work under KÖYMER (about 1000 people) were converted to be civil servants. Agricultural consultants who were taken into TAR-GEL remained in their existing work places and started to render the same services as civil servants.

Table 4.2 Number of staff working under the Tar-Gel Project in line with 4/B Status (2011)

Region	Agricultural Engineer	Veterinarian	Total
Mediterranean	537	180	717
Eastern Anatolia	623	401	1.024
Aegean	696	228	924
South East	697	288	985
Central Anatolia	1.116	503	1.619
Black Sea	848	435	1.283
Marmara	539	221	760
TOTAL	**5.056**	**2.256**	**7.312**

Source: Anonymous 2012/a

It is planned to recruit additional 2.500 staff in 2012.

Non-Public Consultancy Services (Freelance Agricultural Consultancy)

The breakdown of those who meet the criteria as per the Regulation on Agricultural Extension and Consultancy Services in Turkey and hold a Freelance Agricultural Consultancy Certificate and the businesses, which benefit from the Agricultural Extension and Consultancy Subsidies by provinces (2011), is as follows:

Table 4.3 Number of freelance agricultural consultants by provinces in Turkey (2011)

Provinces	No. of Consultants	Provinces	No. of Consultants
01 Adana	7	36 Kars	22
02 Adıyaman	4	39 Kırklareli	2
05 Amasya	11	42 Konya	20
06 Ankara	13	43 Kütahya	11
07 Antalya	13	44 Malatya	20
09 Aydın	8	45 Manisa	15
10 Balıkesir	11	46 K.Maraş	18
12 Bingöl	8	47 Mardin	26
15 Burdur	8	48 Muğla	6
16 Bursa	12	50 Nevşehir	1
17 Çanakkale	3	51 Niğde	1
18 Çankırı	8	52 Ordu	67
19 Çorum	9	53 Rize	3
20 Denizli	10	54 Sakarya	19
21 Diyarbakır	59	55 Samsun	47
22 Edirne	11	56 Siirt	7
24 Erzincan	12	58 Sivas	23
25 Erzurum	5	59 Tekirdağ	26
26 Eskişehir	8	60 Tokat	4

Provinces	No. of Consultants	Provinces	No. of Consultants
27 Gaziantep	21	63 Şanlıurfa	11
28 Giresun	24	67 Zonguldak	4
29 Gümüşhane	1	68 Aksaray	5
30 Hakkâri	3	69 Bayburt	3
31 Hatay	5	70 Karaman	1
32 Isparta	19	72 Batman	8
33 İçel (Mersin)	24	74 Bartın	1
34 İstanbul	2	77 Yalova	4
35 İzmir	41	81 Düzce	10
Total		**745**	

Source: Anonymous 2012/b

Table 4.4 Number of holdings, which benefit from the agricultural extension and consultancy supports in Turkey (2011)

Provinces	No. of Holdings	Provinces	No. of Holdings
01 Adana	296	36 Kars	311
02 Adıyaman	199	39 Kırklareli	63
05 Amasya	443	42 Konya	801
06 Ankara	411	43 Kütahya	438
07 Antalya	254	44 Malatya	540
09 Aydın	284	45 Manisa	658
10 Balıkesir	440	46 K.Maraş	831
12 Bingöl	400	47 Mardin	1.187
15 Burdur	507	48 Muğla	183
16 Bursa	579	50 Nevşehir	7

Provinces	No. of Holdings	Provinces	No. of Holdings
17 Çanakkale	62	51 Niğde	37
18 Çankırı	429	52 Ordu	3.267
19 Çorum	460	53 Rize	150
20 Denizli	366	54 Sakarya	606
21 Diyarbakır	3.742	55 Samsun	2.205
22 Edirne	559	56 Siirt	338
24 Erzincan	437	58 Sivas	1.120
25 Erzurum	188	59 Tekirdağ	1.383
26 Eskişehir	287	60 Tokat	197
27 Gaziantep	975	63 Şanlıurfa	598
28 Giresun	994	67 Zonguldak	200
29 Gümüşhane	36	68 Aksaray	191
30 Hakkâri	189	69 Bayburt	119
31 Hatay	209	70 Karaman	49
32 Isparta	788	72 Batman	399
33 İçel (Mersin)	1.393	74 Bartın	60
34 İstanbul	73	77 Yalova	181
35 İzmir	1.823	81 Düzce	317
Total		**33.259**	

Source: Anonymous 2012/b

When we analyze the two tables presented above together, we can suggest that the development pace of Freelance Agricultural Consultancy in Turkey was rather slow. A comparison between the total number of agricultural businesses in provinces and the number of holdings with which consultancy contracts were concluded reveals that the proportion of the contracted holdings to total number of holdings is very low, which can be attributed to the following reasons:

a) Limited number of consultants (service provision), or

b) Limited demand for consultancy services despite the support payment.

Given the fact that Freelance Agricultural Consultancy is a fairly new practice, the number of freelance agricultural consultants is expected to go up in the future. Nevertheless, it is not equally realistic to expect a parallel increase in the demand for this service because the number of civil servants recruited under the TAR-GEL project is very high and they render services which are similar to the ones rendered by Freelance Agricultural Consultants in villages. Furthermore, farmers are charged for the service they receive from a Freelance Agricultural Consultant. It will naturally be more attractive to receive the same or similar services from civil servants free of charge.

4.3 Conclusion and Recommendations

There are similarities between Turkey and EU in terms of organization of agricultural extension and consultancy services.

Organizations with the technical staff and administrative capacity required to render these services are accredited in EU in accordance with the Directive 1974/2006, by which many new organization have been eligible to render these services in addition to many other already operating in member states.

The relevant article of the Regulation on Organization of Agricultural Extension and Consultancy Services, which gained effect on 08.09.2006 in Turkey, specifies that agricultural consultancy services can be rendered by

a) Producer unions and agricultural chambers employing consultants within their bodies,

b) Agricultural consultancy associations/foundations,

c) Agricultural consultancy companies, and

d) Freelance agricultural consultants.

On the other hand, the Ministry of Food, Agriculture and Livestock Farming still operate in this field.

The most important factor on the demand for agricultural extension and consultancy services in EU is the rural development policy adopted and the support payments under this policy.

With the political reform called EU Common Agricultural Policy in 2003, it was provided to support farmers complying with the requirements in the areas of environment, food safety, phitosanitary issues, animal welfare and good agricultural practice by direct payments.

In accordance with this political reform, it was assigned to the Farming Advisory System (FAS) to provide farmers in member countries with the information they need in the areas of environment, food safety, phitosanitary issues, animal welfare and good agricultural practice in EU. Supports already paid under the EU rural development policy have thus been related

to agricultural extension and consultancy services, which has not only increased the demand for agricultural extension and consultancy services in EU but also ensured continuity and sustainability in the farmer/extension relationship.

There is not such a relationship existing between agricultural supports and agricultural extension and consultancy services in Turkey. The only support one can mention in this field is a payment made to the farmers who have a contract with freelance agricultural consultants to promote utilization of consultancy services more (500 TL/farmer in 2011)

The public side is still dominant in provision of agricultural extension and consultancy services in Turkey and farmers are not charged for the services they receive from the public side.

One of the secondary assignments of the technical staff employed in Farmer Organizations is to render this consultancy service.

Private companies also render consultancy services as limited to the areas in which they do operate on a profitability basis.

The freelance agricultural consultancy system does not seem to be competitive vis-à-vis the public side operating in this market. The fee-for-service system is yet to be very well common in Turkey.

As it is seen, there is a dispersed organization on the service provision side of the agricultural extension and consultancy services in Turkey. We can encounter, within such a system, many organizations and institutions, which have different priorities and operate in different geographies. Another consequence of such a structure is the overlaps and conflicts of services. It is possible to see several people and organizations that render agricultural extension and consultancy services in the same area or region on the same topics.

From another perspective, it can also be considered as diversity for farmers in terms of information resources to yield positive results. However, at this point, it should be noted that organizations working in the same region might have different priorities in their activities. For instance, we can hardly expect a private company working for profit making to have the same priorities with a farmer organization.

One of the issues to tackle with throughout Turkey's accession process to EU is harmonization of agricultural extension and consultancy services with the EU regulations. It shall not be safe to say that there are great differences between the organizational structure and existing practices in EU and those in Turkey. In Turkey, there are many organizations qualified to render these services with their capacity and technical know-how and they are already operating in this field.

The difference observed between Turkey and EU in this field is availability of a mechanism, which ensures a relationship between the activities of organizations rendering these services and priorities of the agricultural policies of the country. On EU side, this relationship is maintained through support payments. It shall be possible to establish a similar structure

in Turkey only after redefinition of duties and responsibilities of people and organizations, including the public side, rendering these services. Within this transition period, Turkey can accelerate her cross-compliance process if she uses assistance programs like IPARD.

References

- ANONYMOUS (2004) Agricultural Education Training Extension and R&D, the 2nd Agricultural Congress, the 9th Commission Report, tarimsurasi.tarim.gov.tr (date of access: January 2012)
- ANONYMOUS (2005) Ministry of Agriculture and Rural Affairs, the KÖY-MER Project, http://www.tedgem.gov.tr/koymer/. (Date of access: February 2005)
- ANONYMOUS (2011) http://onderciftci.com (date of access: December 2011)
- ANONYMOUS (2012/a) Ministry of Food, Agriculture and Livestock Farming, http://www.tarim.gov.tr. (Date of access: January 2012)
- ANONYMOUS (2012/b) Ministry of Food, Agriculture and Livestock Farming, Directorate General for Agricultural Reforms, Ankara.
- ATEŞ, A. SAYIN, C. (2008) A Study on Private Agricultural Consultancy Services in Greenhouse Farming in Antalya Province, The Journal of Faculty of Agriculture, The Mediterranean University, 21(2), 251–263
- CEYLAN, C. KÖKSAL, Ö. AKIN, A (2005). An evaluation of Agricultural Consultants Working in GAP Region under the Village-Centered Agricultural Production Support project from an Agricultural Extension Perspective, the 4th GAP Congress, Volume I, 490–497, Şanlıurfa.
- OFFICIAL GAZETTE Date: 27.12.1986, Number: 19324, Ankara
- OFFICIAL GAZETTE Date: 08.09.2006, Number: 26283, Ankara.
- OFFICIAL GAZETTE Date 21.05.2009, Number: 27234, Ankara
- OFFICIAL GAZETTE Date 08.06.2011, Number: Duplicated 1, Ankara.
- OFFICIAL GAZETTE Date 27.08.2011, Number: 28038, Ankara.
- ŞENOCAK, C. (1967) Extension and Communication, The Fine Arts Printing House, Ankara. 433 (p)
- TATLIDİL, H. CEYLAN, C. (2000) "Development of Agricultural Extension Services in Turkey" The 5th Technical Congress of Agricultural Engineering in Turkey. Turkish Chamber of Architects and Engineers (TMMOB) The Chamber of Agricultural Engineers, Volume 2. p. 1105–1116, Ankara.
- ÖZÇATALBAŞ,O. BUDAK, D.B, BOZ, İ., KARATURHAN, B. (2010). "Measures to Develop Agricultural Consultancy System in Turkey" the 7th Technical Congress, Ankara.
- ÖZER, M. (2005) A Study on Evaluation of Agricultural Extension Works of Şanlıurfa Agro-GAP Leader Farmer Consultancy Association and their Impacts, University of Harran Institute of Science, Department of Agricultural Economy, A Masters' Thesis, (not published), Şanlıurfa.

5. CHAPTER Reproduction and Management

Prof. Dr. Salahattin KUMLU

5.1 Introduction

Reproduction is the basis of cattle breeding. It is a must to outsource breeding in sufficient numbers for a herd to sustain its existence in case the quantity and the quality of male and female breeding cattle are poor in reproduction. An enterprise then would be in jeopardy to sustain its existence since the cost of reproduction will be too much to handle for the enterprise.

It is appropriate to define the reproduction in terms of female and male breeding cattle as follows:

- For female breeding cattle, it is the capability to become impregnated at the time of reproduction and to calve healthy offspring until advancing years.
- For male breeding cattle, it is the capability to produce semen in sufficient quality and quantity at the time of reproduction and to sustain it until advancing years.

As seen in aforementioned definitions, male and female breeding cattle are supposed to actively fulfill reproductive functions in a certain period of their lives.

It is not common, in recent years, to come across with methods of breeding male cattle for breeding purposes in an enterprise. The reason is that the artificial insemination has become widespread and offered substantial advantages in comparison with natural insemination. For that matter, the following chapters will dwell solely on the reproduction of female breeding cattle and be brought into a discussion in various aspects.

5.2 Reproduction Criteria for Female Breeding Cattle

Some criteria or qualities may have a role to play in order to define and compare female breeding cattle in terms of reproduction. The following qualities are closely related to each other.

- The first breeding age
- Calving interval
- Time between calving and the first following insemination
- Length of the service period
- Length of productive life

- Pregnancy rate in the first insemination
- Non-return rate
- Number of insemination per pregnancy
- Calving rate

The First Breeding Age

The reproduction period of female cattle begins the moment she gives a birth to her first calf, and lasts until culling. In other words, the time that elapsed between her birth and first calving is a non-productive period. The shorter this non-productive period is, the better it is for an enterprise since it causes breeding and feeding expenses.

The length of this non-productive period depends on factors such as the genotype of the animal, the herd management adopted by the enterprise, breeding and feeding conditions. Fast-growing and developing genotypes and cattle breeds come to the breeding age at an early age. For instance, culture races such as Holstein, Brown Swiss, and Simmental may be inseminated and impregnated when they are 14-15 months old. Slowly growing and developing native breeds, on the other hand, come to maturity as late as when they are 18-20 months old.

Another factor in the first breeding age is the herd management adopted by the enterprise and, the breeding and feeding expenses that can be analyzed within this scope. As generally accepted, a heifer is expected to grow into 2/3 of the mature weight so as to be inseminated for the first time. For instance, the first breeding age in a culture breed with a mature weight of 600 kg is the age when the animal reaches to a level of 400 kg in weight. 200 kg live weight, on the other hand, can be considered convenient for insemination when it comes to a native breed with a mature live weight of 300 kg. To sum up, it is favorable for culture-bred heifers to be inseminated when they are 14-15 months old and at least weighing at 350 kg if the age and the live weight are jointly considered. The native breeds are expected to grow into 2/3 of the mature weight as long as they are not younger than 18 months old.

Studies have proven that there is a major relation between the first breeding age and milk yield, and those calving before they are 24 months old are poor in milk yield as well as the fact that the milk yield enhances till the first breeding age is 30 months even if it is not linear but decreases in advancing years. Another argument suggested in such researches is that the increase in milk yield as a result of an increase in calving age is not at a level to meet losses arising from prolonged non-productive periods of cows. It is, therefore, suggested that the first insemination age should be 14-15 months in culture breeds as 24-25 months would be ideal for the first breeding age.

Calving Interval

The calving interval, a time elapsed between two calving, is expected to be one year (365 days). In other words, each cow giving a birth to one healthy calf in a year and being milked

for 305 days in average are among the objectives of cattle breeding. The calving interval now exceeds 13 months and hovers around 14 months due to the recent increase in milk yield and the downturn in insemination. To put it another way, it is no longer odd for the calving interval to exceed 400 days in dairy cattle breeding. In addition, it is probably economical that the cows with high productivity in milk and a persistency in character are milked for longer periods of time when the milk prices are high and thus leading to prolonged calving intervals.

Duration (day)	Procedure	1st Status	2nd Status	3rd Status
1	Calving			
40-45	First estrus			
60-70	1st insemination	Pregnancy		
80-90	2nd insemination		Pregnancy	
80-90	3rd insemination			Pregnancy
340-350	Calving	Calving		
360-360			Calving	
380-390				Calving

Service Period Pregnancy period Calving interval

Figure 5.1. Emergence process related to the traits of reproduction in female breeding cattle

Time between Calving and the First Following Insemination

A span of 6 weeks must be elapsed subsequent to the calving for a uterus to be operational for a new pregnancy. It is known that some of the cows are probable to be mad within this period of time, and it is possible to inseminate. The embryo cannot hang on the uterus thus frequently leading to embryonic deaths since the uterus is not ready for a new pregnancy when it comes to early pregnancies. It means an economic loss and unduly stressing the cow out.

As seen in Figure 5.1, the insemination required to result in pregnancy ideally takes place in the 80th-90th days following the calving when the principle stipulating to give a birth to one healthy calf in a year and it is 280 days of pregnancy for cattle. It is, however, recommended that the first insemination be between the 60th and the 70th days considering the fact that some of the cows are probable to return. One must pay regard to factors such as medical condition of the cow, milk yield, persistency value and milk prices.

Length of the Service Period

The time elapsed between the calving and the insemination resulting in pregnancy is called service period. The service period, one of two elements for calving interval, is expected to be at least 60 and at most 120 days. The reason is that the pregnancy lasts for 280 days in cattle, and it is easily understood that the service period must be ideally 80-85 days considering the principle stipulating to give a birth to one calf a year. This, however, is not possible in practice, and thus 60-120 days are regarded as normal.

Length of Productive Life

It is to the benefit of an enterprise if the productive period starting with the first calving is long. This is of extreme importance in terms of cows with high productivity.

If the productive period is short, then the breeding expenses are high, and the non-productive period is long and thus the economic losses are huge. The researches point out that the milk yield increases in cows at first depending on the age and then tends to decline as of the 7th-8th years. In that case, one can easily suggest that a cow having culled or being culled from a herd leads to a substantial loss in milk yield.

The time between the generations, however, must be short in herds of intensive breeding with a view to making use of genetic growths to the utmost.

Calving 3 times in average per cow would be sufficient to insource heifers required for herd renewal. It is the minimum number in consideration of factors such as calving interval, sex ratio of cattle, losses in the course of growth and eligibility for breeding.

As seen in aforementioned arguments, the average length of productive life for cows must not shorter than 4 years. This can rise to 6-7 years in commercial herds with production purposes so as to make use of the milk yield which increases as cows are aging.

Pregnancy Rate in the First Insemination

The pregnancy rate is expected to be 50 % in the first insemination for both heifers, and cows subsequent to calving. The objective is to minimize insemination expenses and prevent unduly prolonged calving intervals and potential losses.

What is meant by the first insemination is the first insemination for a cow subsequent to calving or an insemination of a heifer for the first time. Either the end of the year or the end of the period when the breeding value is projected is the time for the calculation of the pregnancy rate in the first insemination.

Non-Return Rate

Some of the inseminated cows and heifers are not impregnated, and show signs of estrus state again 19-21 days later. One cannot be sure whether a cow is pregnant or not unless a pregnancy test is performed since, the cows with a poor estrus state or with ovarian dysfunctions show no sign of estrus state. Performed as early as at the end of the 6th week, the pregnancy test precisely indicates whether the cows are pregnant or not. A non-return rate is developed as a norm in an effort to identify and point out the number for cows impregnated

following the insemination. This is defined as the ratio of cows proved to be pregnant in 56 days following the insemination to the total number of inseminated cows, and symbolized in GDO_{56}. Some countries refer to the ratio of impregnated ones until the 90th day subsequent to the insemination instead of 56 days, and the number attained is symbolized in GDO_{90}.

GDO_{56} is not desired to be below 60 %. GDO_{56} is supposed to be a little bit higher than the pregnancy rate in the first insemination. The reason is that GDO_{56} includes the records for non-pregnant cows within the first 56 days subsequent to the insemination. Returns in forthcoming years are included in calculations for the pregnancy rate in the first insemination.

The Number of Insemination per Pregnancy

Named as an insemination index, this trait is another way of expression for success in insemination. The aim for the number of insemination per pregnancy for cows raised in better conditions was 1.5-1.8 up until recently as it is now a must to raise this number to 2.0 and higher since the success in the first insemination has diminished.

The insemination index is lower in heifers compared to cows. The reason is that the heifers are more healthy and in better shape.

Calving Rate

The ratio of calving cows in a certain year to the total number of cows in a herd is a major criterion giving the simplest information regarding to the herd, and the reproduction in the region or entire country. The calving rate helps to identify the number for calves born, and thus benefiting in enterprise planning. The weakest link of this criterion is the fact that it can be identified as late as the end of the year and thus running late to intervene when a problem comes along.

5.3 Factors Affecting Reproduction

Numerous researches point out that the variation in multiple reproduction traits usually results from environmental factors, and the genetic variation has little to do with this regard. As seen in numbers of Table 5.1, the share of genetic factors is only 15 % for variations in breeding cattle in terms of reproduction. This means that the variations can be minimized on condition that animals are provided with decent breeding, feeding and housing conditions, and a great deal of problems can be overcome.

Table 5.1 Factors affecting reproduction and their relevant shares in variation

Factor	Share (%)
Herd management	40
Feeding	30
Hygiene/infection/diseases	10
Housing	5
Genetics	15

The fact that the share of environmental factors is high, and the share of genetics is low makes it more difficult for animal improvement studies. It is, however, a fact that the genetic variation with such traits is at a level to offer an opportunity for improvement studies. In fact, there are some improvement programs that have recently made substantial progress in terms of these traits.

5.4 Herd Management Program

That the losses in reproduction lead to severe economic costs, and multiple environmental factors have a role in affecting traits of reproduction necessitate comprehensive, elaborate and specific herd management programs. These programs are designed and put into practice with a view to preventing problems to occur in enterprises and finding solutions to these current problems.

Two principles are the highlights of the herd management programs. The first one is to minimize losses, as the other one is to take hygiene measures in a fashion that will leave no room for a treatment.

The following criteria are useful in evaluating the success of the herd management program.

- Making each cow in the herd impregnated
- Having calves every year in a sufficient number and quality, and breeding them with the least loss.
- Keeping the dry period around 2 months and thus avoiding extra expenses.
- Generating semen to enhance the genetic level of the herd through a planned mating process.

The key point is to make cows in the herd timely impregnated. Timely impregnation means that the service period shall not exceed 120 days, as the insemination index cannot be above 2. This stands for saving on both labor and insemination expenses. More importantly, one impregnation per year paves the way for having a healthy calf and high milk yield. To sum up, the primary duty of both owners of these enterprises and advisors is to make sure that the cows are timely impregnated.

The pregnancy process and well-managed calving as the last stage of this process are of extreme importance in terms of having healthy calves that are insurances for the future of an enterprise. The objective in this regard is to have calves as many as the current capacity of the enterprise for cows.

It is another major point to be considered that the newborn calves escape the first 8-week period with light scrapes. As is known, the calves do not have a developed immune system in this period, and they must be carefully protected against diseases.

If the calving interval is kept around 12-13 months, then it is possible to milk cows for 10-12 cows and to dry them off for 2 months prior to the calving. The cows are likely to be in

dry-off period for a longer time in longer calving intervals and that means an economically substantial loss.

Inasmuch as the calves are the future of an enterprise, then one must make sure that the genetic levels of these calves are above the herd average. 60-70 % of the newborn calves must be at service for herd renewal. In other words, they must replace the cows to be culled from the herd due to low productivity, aging and diseases. In order for breeding cattle to have, a genetic level above the herd average, one must be knowledgeable with breeding values of mothers and make sure that they are impregnated with semen of bulls that is the best fit for them. This is a responsibility that must be shouldered by advisors and animal improvement foundations.

A herd management program with improvement purposes for reproduction must cover the following four main subjects:

- Herd monitoring
- Inspection of reproduction process
- Genetic improvement
- Balanced feeding

No matter what the scope of the program is and how well it is planned, one must remember that the success depends on the performance and interest of implementers. Unless the person or persons in charge of looking after and managing animals has/have sufficient knowledge and embrace what they do, then the success is a pipe dream. In addition, there is no guarantee for success in such programs since factors affecting yield traits are numerous and it may not be possible to inspect them all.

5.4.1 Herd Monitoring

One of the pre-requisites for a well-functioning herd management in dairy cattle breeding is to number the animals in a way to avoid intermixing and be easily legible from 15-20 m away. Another major pre-requisite is the collection for data related to the animal growth, yield and health, and registry of these data in a referable fashion on demand.

There are several methods for numbering animals. The most common one is plastic ear tags. Apart from that, some enterprises making use of computer technologies put electronic transmitters on neck or below the skin, and animals can be identified with these electronic devices connected to a computer.

Records for reproduction, milk and meat yield as well as the methods to be adopted in this regard are designated and restructured if required by ICAR (International Committee for Animal Recording) members of which include countries with developed livestock systems notably EU countries. Apart from that, each animal breeder takes additional measures to facilitate the herd management.

Identifying animals by their yield traits and isolating them from others are of extreme importance in terms of planning all the procedures related to each animal. This is an inevitable obligation particularly for major enterprises. It is not an easy task to completely bear in mind the variations displayed in a few years of lifespan even for small enterprises. That is why the small enterprises must number and register animals as the benefits of this method are at a level to meet the expenses.

Monitoring the estrus state of cows and making use of the estrus state and an insemination calendar with a view to intervening when required are quite useful. One can note down days of estrus state, the length of this estrus state, information regarding to estrus cycle, interventions in insemination and veterinary on this calendar the reminiscent of a 21-day chart. The objective is to monitor the estrus cycle recurring within 19-21 days, make sure that cows are timely inseminated and impregnated and thus cut and minimize expenses and financial losses. For instance, Table 5.2 displays the insemination of a cow called Hande in January 1. In case this cow shows signs of estrus state 21 days later, the likelihood of insemination to be successful would increase. In fact, the pregnancy test performed in February 12 that is to say 6 weeks after the cow shown signs of estrus state and then was inseminated was positive and Hande was registered as pregnant in February 14. A cow called Selda had bleedings in January 27, and she was concluded to go through a sub-estrus. Selda was kept under surveillance for 20 days more, and turned out to be in estrus state as she was inseminated in February 17. Selda was examined again 19-21 days later and turned out to show no signs of estrus state.

Table 5.2 A model chart of estrus state and insemination

Day\Month	December/ January	January/ February	February/ March	March
Monday	31	21	11	4
Tuesday	1 Hande inseminated	22 Hande Monitor!	12 Hande test!	5
Wednesday	2	23	13	6
Thursday	3 Elif calved	24	14 Hande pregnant	7 Elif estrus?
Friday	4	25	15	8
Saturday	5	26	16 Selda examine!	9
Sunday	6	27 Selda bleeding!	17 Selda inseminated	10 Selda examine!

Day\Month	December/ January	January/ February	February/ March	March
Monday	7	28	18	11 Selma calved
Tuesday	8	29	19	12
Wednesday	9	30	20	13
Thursday	10 Selma dry	31	21	14
Friday	11	1	22	15
Saturday	12	2	23	16
Sunday	13	3	24	17
Monday	14 Esmer estrus	4	25	18
Tuesday	15 Esmer inseminated	5 Esmer inseminated	26 Esmer examine!	19 Esmer pregnant?
Wednesday	16 Esmer bleeding	6	27	20
Thursday	17	7	28	21
Friday	18	8	1	22
Saturday	19	9	2	23
Sunday	20	10	3	24

Each and every enterprise must have a small or large study room depending on its capacity to monitor animals along with yields and make use of them in a way fitting for purpose. In this room, each cow must definitely have a unique card on which the breed information, diseases and treatment methods must be registered. It is highly important for a breeder to take a look at information on this card before taking a decision on any procedure regarding to a cow. The enterprises making use of computer technologies replace cow cards by computer logs. Herd management programs designed for this purpose provide major benefits to breeders in decision-making process and enterprise planning. The point that cannot be overlooked is the

importance for the accuracy of information a breeder inputs into a computer and his ability to make use of reports based on this information and how willing he is in this regard. In other words, the computer technology is an auxiliary tool for breeders, and its benefit lies behind the knowledge, experience and willingness of the beneficiary.

5.4.2 Inspection of Reproduction Process

The reproduction process must be regarded as a period beginning with birth and lasting until death of an animal. The reason is that it is a fact proved by researches that fouls committed in growth period have an impact not only on reproduction but also on milk and meat yield. The scope hereby will be restricted, and it will dwell only on calving, veterinary program, inspection of estrus state and insemination.

Calving

Pregnant cows must weather the calving (birth) period without any major medical problem and stressing out, and to timely purge the placenta so that they can sustain their reproduction capabilities in forthcoming years. A cow, prior to calving, must be disinfected at least one week ago and taken to calving stall. If that is not possible, then it is necessary to clean stalls and keep them available for calving.

Muscles in the sacrum relax prior to calving as the vagina moistens and gets slippery. The cow gets restless, lies down and up and looks around. A cow usually lies down at time of calving as the outer saccule bursts and the semen is released. Labor paints regularly kick in and come into focus. The calf is pushed out as pains keep coming following the burst of the outer saccule. At the end of this two-hour process, the forelegs of the calf are visible in vagina. If both legs of the calf are equally pushed out, there will be no need for assistance. If one of the legs is a little bit ahead of the other, then the other leg is pulled to an equal level with a painstaking intervention.

One must wash his hands and wear plastic gloves prior to any intervention to avoid communicable diseases. The cervix of the cow must be dried off with disinfectant-added warm water. One must remember that the calving is a natural phenomenon. In fact, 95 % of all calving are normal deliveries. There is no need for an intervention in normal deliveries. The calf is not visible within an hour following the burst of the outer saccule, and unless the cow shows a significant sign of pain, there is no need for a veterinary intervention. In this regard, the position of the calf within the uterus is examined at first, and then repositioned with a painstaking intervention if any poor posture comes in sight.

If only tiptoes and nose of the calf are visible even after an hour following the burst of the outer saccule, then one must resort to a veterinary physician making sure that the calf is too big for a normal delivery. Otherwise, any intervention can hurt the calf and the cow. The calf is examined at first with a view to assisting in calving. Then, the calf is carefully tied on the upper part of both ankles and pulled by 3-4 people at most. This procedure actually requires three people the most experienced of whom checks up on pains and vagina of the cow and gives instructions to other two. The calf is pulled behind the cow as it is pulled towards the

legs of the cows after forelegs; the head and the thorax are all out. Faulty pulling leads to compression in the vagina of the calf and its suspension and accordingly to death as well as wounds and injuries in the vagina. Pulling process must begin as the pain keeps coming, and stop as the pain ends. Anything to make the cow stressed out at the time of calving must be eliminated. Otherwise, the cow loses hormonal balance due to fear as normal labor pain and the purge of the placenta may be late.

The cow must be monitored subsequent to the calving. In case the placenta is not purged within 6-12 hours, a veterinary physician must intervene. Otherwise, it leads to infection and inflammation in the vagina.

The veterinary physician must examine reproductive organs within the following month in an effort to diagnose and treat a potential inflammation. If the cow does or cannot stand up subsequent to the calving, then the veterinary physician must examine the cow and make necessary interventions suspecting that the nervous system of the animal, bones or muscles are damaged or the cow caught hypocalcaemia.

Veterinary Program

The reproduction process must be inspected at intervals of 2-4 months by a veterinary specialist. This is of major importance particularly for the period between 6-8 months prior to calving and the following 2 months after the calving. Otherwise, problems are likely to become chronic, as treatments would be expensive and long-standing. Results of a study carried out in Germany prove how important the early diagnosis and treatment are. As concluded from the relevant study the results of which are seen in Table 5.3, the pregnancy rate in insemination increases in herds a veterinary physician regularly provides service within 70 days subsequent to the calving as the rate for those culled from the herd due to infertility substantially decreases, and the service period prominently shortens. In conclusion, a breeder lacking in regularly making use of veterinary services has to spend 4.2 times more per cow.

Table 5.3 Consequences of timely and late interventions in the period subsequent to the calving

	Timely	Late
Pregnancy rate (%)	83	67
Rate for culling due to infertility (%)	7	33
Frequency of treatment/cow	1,7	2,1
Insemination index	2,2	4,2
Service period (day)	124	225
Treatment expense per pregnancy*	100	128
Cost expense per cow	100	427

*: The rate is regarded 100 in cases of timely interventions.

The procedures to be followed in the veterinary program are listed in periods as follows:

- Dry-off period: Udders must be examined in the 6th-8th weeks prior to calving with a view to avoiding mastitis, and some blood tests must be performed to diagnose metabolic problems.
- The 1st-2nd week subsequent to the calving: The vagina and uterus must be examined to avoid any laceration and injury, and a blood test must be performed.
- The 4th-6th week subsequent to the calving: The ovarian, vagina and uterus must be examined to check the inflammation status and see whether they all function, and some preliminary information must be obtained regarding to estrus state.
- The 6th-8th week subsequent to the first insemination: Pregnancy diagnosis
- Procedures to be followed in other periods: The returning cows must be identified, and those with medical problems must be kept under surveillance.

Inspection of the Estrus State

Monitoring the estrus cycle of each cow, identifying diverging ones and intervening in them are of vital importance for dairy cattle enterprises since the number for losses due to estrus states flying under the radar and infertility is immense. The researches point out that only 6 % of cows with no sign of estrus state have an inactive ovarian. Other major causes are ovarian cysts (8 %) and low hormonal secretion (85 %).

One the reasons why a cow shows signs of estrus state in spite of having an active ovarian is ill-conditioned housing. Another potential reason is malnutrition of cows. It is natural to diagnose a silent estrus in cows unable to meet their energy needs with rations, lacking of sufficient amount of cellulose in their rations and fed with excessive amount of protein. Lacking of manganese in the ration is likely to lead to a silent estrus. The cows having troubles in milk yield, nails and parasites are likely to have a minor estrus state. The ovarian can be inactive due to growth retardation and ovarian cysts. A veterinary specialist must examine the ovarian to see whether the ovarian are active or not, and identify the level of hormones in milk or blood.

Breeders in enterprises having trouble in hidden estrus state must follow these procedures:

- Increasing the number of monitoring for daily estrus state and making use of an estrus state calendar.
- Releasing and monitoring cows at certain intervals within stalled barns.
- Progesterone milk test
- Using a bull or cow
- Use of a device for estrus state
- Balanced feeding

- Improvement of housing and nursing conditions
- Measuring their moves
- Examination and correction of rations

If one cannot overcome the problems in spite of all the measures taken by the breeder, then a veterinary specialist must perform a gynecological examination and ovarian function test, and check the reproduction process at regular intervals and administer a hormonal treatment when required. As a result of various researches, it is concluded that there is a significant relation between the number of monitoring for daily estrus states and the success in diagnosing an estrus states. One-time monitoring for at least 20 minutes a day can help to identify 61 % of cows with estrus state. If the monitoring is performed 2 times, then the rate rises to 80 % and then to 100 % if it is performed 4 times. It is beneficial to monitor a herd at night and particularly early in the morning since more than 70 % of the estrus states emerge at night

Table 5.4 The rates for identifying cows in estrus states with daily monitoring

The number of daily monitoring	Rate (%)
1	61
2	80
3	91
4	100

Insemination

As is known, each and every female breeding cattle growing into a sexual maturity when they are 8-9 months old lays egg at an interval of 19-21 days. Called as an estrus cycle, this process is divided into 4 categories as in pre-estrus, actual estrus, post-estrus and inter-estrus. The total time for periods in which the signs of pre, actual and post estrus emerge is 2-3 days long. The inter-estrus period in which there is no sign of estrus, state takes 17-19 days.

As seen in Figure 5.2, the pre-estrus takes 6-24 hours. A cow, in the meantime, show signs of restlessness, serving other cows, inflation and inflammation in vulva.

The restlessness decreases, and the cow relaxes and let other cows serve in the actual estrus state, which takes 6-24 hours. It is typical to release a lucent, dense and sticky discharge from the vulva.

Starting subsequent to the end of the actual estrus state, the post-estrus state takes 12-24 hours.

Typical symptoms of this state are the total relaxation of cows, letting other cows serve, dirty and blur discharge from the vulva.

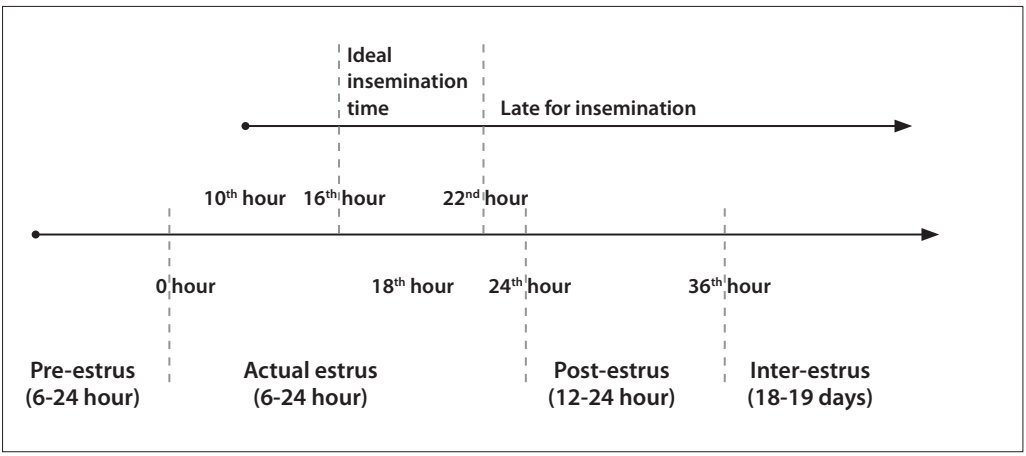

Figure 5.2 Estrus cycle and insemination time

As seen in Figure 5.2, the ideal insemination time is between the 16th and the 22nd hours of the actual estrus period. The reason is that the egg is released approximately 6 hours after the end of the actual estrus state, and it keeps its impregnation traits intact for approximately 6 hours. A 6-hour of maturation period is required so that the semen in the vagina can inseminate the egg. The semen keeps its insemination trait for 15-20 hours.

As specified in aforementioned arguments, the ideal insemination time is towards the end of the actual estrus state or right after the end of the estrus. The rule in practice is to 'inseminate cows at night if they show sign of estrus state in the morning and inseminate the rest in the following morning if they show sign of estrus state at night'. For that matter, timely diagnosis of the estrous state is a pre-requisite.

In order to be highly successful in insemination,

- The cow to be inseminated must have a clean and lucent vulva discharge.
- The signs for estrus state of a cow must be clearly registered in calendar of estrus state.
- Double insemination must be performed only for cows with an estrus state taking more than 24 hours, and one must keep in mind that the double insemination does not increase the likelihood of success for cows with normal signs of estrus state.
- The animal must not stress out at the time of insemination. Otherwise, no contraction would be possible for uterus semen to reach the vagina.
- The first insemination must be performed between the 60th to the 80th days subsequent to the calving. It is normal for this period to take 100-120 days in cows with high milk yield and persistency.

5.4.3 Animal Improvement

A major part of variations specified in reproduction traits results from environmental factors as high genetic variations in terms of reproduction traits offer substantial opportunities

for genetic improvement studies. The subjects to consider in selecting bulls and cows with a view to improving the reproduction are as follows:

Bull selection:

- Bulls the heifers of which calve in a troublesome fashion must not be selected.
- Bulls with bulky calves and potentially troublesome in calving must be carefully selected.
- Bulls the heifers of which are short in the first breeding age must not be selected (the rate for heifers having completed 2 lactations).
- Bulls the mother of which has a life-long low milk yield and short first breeding age must not be selected.
- Bulls the inherited traits of which rush to semen must not be selected.

Cows selection:

- Cows with cysts in the ovarian in spite of a balanced feeding, and with such tendency in their breeds must not be selected for breeding.
- Cows with reproductive and metabolic problems and having such problems in their breeds must not be selected for breeding.
- Cows with a low persistency in lactation must not be selected for breeding.
- Cows with a low capacity in feed consumption must not be selected for breeding.

5.5 General Assessment

As seen in aforementioned arguments, the relevant and experienced breeders can easily overcome reproduction problems in enterprises with the support of a veterinary physician, and attain objectives.

There are a few recommendations that breeders and advisors can benefit from:

1. If a problem is a concern for an entire herd, then revise your herd management, rations, feeding, housing conditions and parasite solutions.
2. If the problem concerns one or a few cow(s), then have access to information regarding the relatives of cows and see whether the problem is genetic or not and check your mating-plans and the quality for bulls you select.

Check whether the enterprise complies with the following criteria in order to be regarded successful in terms of reproduction:

1. How many cows do show signs of estrus state within the first 50 days subsequent to the calving? (must be at least 80 %)
2. How many cows are inseminated between the 60th and the 80th days subsequent to the calving? (must be at least 70 %))
3. How many cows are impregnated in the first insemination? (must be at least 50 %)

4. What is the average number of insemination per pregnancy for cows? (must not exceed 2)
5. How many cows are inseminated 4 times or more per pregnancy? (must be at least 10 %)
6. How long does an average service period take? (must not exceed 3 months)
7. What is the average for the first calving age? (must be around 24-26 months)
8. What is the length of productive life? (must be around 4 years)

References

- Akman, N., 1998: Practical Cattle Breeding. Anadolu University, Faculty of Agriculture, Department of Zootechnics. Foundation of the Turkish Union of Agricultural Engineers Publication. Ankara
- Anonymous, 1994: ADR Handbuch. Empfehlungen und Richtlinien. Arbeitsgemeinschaft Deutscher Rinderzüchter. Bonn-Deutschland
- Anonymous 1995. Fruchtbarkeit im Kuhstall. Top Agrar, Münster-Hiltrup, Deutschland ISBN 3-7843-2537-8
- Anonymous, 1995: Reproduction Management. VEEPRO HOLAND. Information Center for Dutch Cattle. Arnheim-Holland
- Anonymous 1999. Rinderproduktion in der Bundesrepublik Deutschland 1998. ADR, Bonn, Deutschland
- Anonymous 2001. 8th Five-year Development Plan Specialization Committee. DPT:2574-OIK:587. ISBN 975-19-2710-2
- Anonymous 2007. Das wichtigste in Kürze 2006/Summary 2006. http://www.adr-web.de/download.php/1726/jb7dwik07.pdf
- Anonymous 2007. ICAR Recording Guideliness. http://www.icar.org/Documents/Rules and regulations/Guidelines/Guidelines_2007.pdf
- Anonymous 2008. Structure of Dairy Sector in Sweden. http://www.svenskmjolk.se/ImageVault/Images/id_962/scope_128/ImageVaultHandler.aspx
- Anonymous 2008. Holland Dairy Data 2006/2007. Average production figures of Black-And-White and Red-And-White Herdbook cows. http://www.veepro.nl/dairy-data/frameset.htm
- Anonymous 2008. National Artificial Insemination Inventory Report. www.dsymb.org.tr
- Claus,R., H. Karg, 1981: Fortpflanzung. "Ed. H. Kräuslich, Rinderzucht". Verlag Eugen Ulmer Stuttgart: 165-210
- Foote, R.H. 2002. The history of artificial insemination: Selected notes and notables. J. Anim. Sci., 80:1-10.

- Işık, U.E. 2006. A study on Longevity and Reasons for Culling in Holstein Dairy Cows in Antalya. Akdeniz University. Institute of Science. Postgraduate Thesis. Antalya
- Kumlu, S., 2004. Damızlık ve Kasaplık Sığır Yetiştirme. The Cattle Breeders Association of Turkey. Issue No: 3, Ankara
- Lotthammer, K.H., G. Wittkowski 1994. Fruchtbarkeit und Gesundheit der Rinder. Eugen Ulmer, Stuttgart, Deutschland ISBN 3-8001-4525-1
- Mackrott, H., 1994: Milchviehhaltung. Verlag Eugen Ulmer Stuttgart
- MacMillan, K.L., 1994: Reproductive Management. "Ed. H.H. Van Horn, Large Dairy Management". Management Services American Dairy Science Association. Champaign-USA: 88-98
- Weaver, L.D., 1994: Reproductive Health Programs. "Ed. H.H. Van Horn, Large Dairy Management" Management Services American Dairy Science Association. Champaign-USA: 99-109

6. CHAPTER

Milk Yield and Quality

Prof. Dr. Salahattin KUMLU

6.1 Introduction

Milk yield, annual milk production and milk quality are among the most important elements for dairy cattle breeders. First and foremost, the main factor decisive on the income of an enterprise in dairy cattle breeding is the quality and quantity of the milk produces and marketed. In an average dairy cattle breeding business, it is expected that 60-70% of the annual income is raised out of milk sales. Quality of the milk produced and the quantity of milk sold daily are significant factors.

Due to the reasons briefly touched upon above, it is necessary to provide dairy producers with regular, timely and accurate information concerning milk yield, production and quality. From this perspective, we will cover the following topics in this section:

- The udder structure
- Formulation and release of milk
- Milking and milking techniques
- Structure and quality of milk
- Factors affecting milk yield
- Issues to be followed for quality and high-yield milk
- Overall evaluation

6.2 The Udder Structure

The reason for milk production in all mammals is to meet the nutritional needs of the baby in early periods of its life. In other words, milk is an invaluable nutrient, which is produced not "without any reason" but for a calving cow to feed her calf. Therefore, daily milk yields of non-bred domestic cows can meet only the needs of calves. The milk yield that goes up to 5-10 kg daily just after calving gradually goes down in time, and ends in 4-6 month.

In culture breed cows such as Holstein and Brown Swiss, which were bred for milk production, daily milk yield increased significantly and lactation period was extended. The Holstein breeds, which have the highest milk yield, yield 30 kg milk daily in average, with more than 10 tons of milk production annually.

In cow breeds that were bred for beef production, milk yield is usually so low that they can hardly meet the needs of their calves. It is therefore very common to use the breeds with

a high milk production such as Jersey and Holstein as milking mothers for the calves of beef breeds such as Charolais, Hereford and Angus.

The period that follows calving and in which udders produce milk is called lactation or milking period. This period which lasts for 4-6 months for local breeds, as mentioned above, is supposed to be 10-11 months for culture breed dairy cows. The aim here is to milk the cow for 10-11 months and to have the cow calve again in 2 months after lactation. We can thus have one calf from each cow annually, and cows will be milked for 10-11 months.

The udders, as the organ in charge of production of milk, starts to take shape as early as when the calf is in the uterus of the caw. This process keeps on after calving. Udders, which finalize their growth to a considerable extent, will be ready to lactate particularly in the last three months of pregnancy. Starting from the 7th month of pregnancy, the alveolar cells, which are in charge of lactation, start to lactate and to be are filled with milk, as a consequence of which the alveoli and the udders start to swell out. In very late periods of pregnancy, the swelling of the udders becomes apparent externally; milk may even leak out from the tips of udders in some cows. The milk lactated in the udders after calving can be drained by sucking or milking.

The udders located in a dispersed manner from between the rear legs of the cow towards the abdomen consist of 4 sections that are distinctly independent from each other. The udder parts are seen in two parts on the right and left-hand sides, which are run through the udder suspensory ligament. Though less apparent, the front and rear udders also seem to be separate from each other.

The capacity of the two parts forming the front udder is 40% of the total udder capacity. The share of the rear udder parts in the total capacity is around 60%. In short, we should bear in mind that the capacity of the front parts is less than that of the rear parts.

Each part of the udder consists of the following systems:

- The parenchyma tissue producing the milk (mammary gland)
- Milk transmission system (milk channels and cisterns)
- Connective tissue
- Blood and lymph circulatory system

Each part is composed, from outside to inside, of the tip of the udders, the udder-tip channel, the udder-tip cistern, the udder cistern, milk channels and alveoli.

In some udders, there can be more than 4 udder tips. It is useful to surgically remove, in the first 1 or months following the calving, these extra udder tips, which are often composed of only udder tips and seen mostly in the rear udders.

The empty udder weight is 5-10 kg in breeding heifers which grow up with balanced nourishment and are 14-18 months old whereas 10-25 kg in cows in intra-mammary infusion.

The weight of udders may vary in milking cows according to the milk yield, daily milking frequency and milking status. In other words, in a cow which can yield 30-40 kg milk in the milking period and which is milked twice a day, the pre-milking udder weight can go up to 30-60 kg.

A steadily ligated udder that is swollen and drained twice a day is of vital importance for udder health, business economy and accordingly the length of productive life. Loosely ligated udders sag and might be injured due to extrinsic factors such as thorns and bushes, and be vulnerable to mastitis. In addition, it is difficult to milk sagging udders.

The udders are expected to have strong mid and side ligaments due to the aforementioned reasons. Sag of udders is defined as a trait moderately inherited. One must attach utmost importance not to select cows with sagging udders or with udders prone to sag as well as heifers with such traits for breeding.

The cows must have traits to facilitate milking and minimize mastitis risk. An ideal form of udder can be defined as "safe-type, properly and strongly ligated to abdomen, outspread between rear legs and unto sacrum, teats in the midst of udders, vertical to ground or slightly inward, 5-6 cm of teats in length, teats at the knee level or above in the first 3 lactations". An udder is defined as close to or far from ideal depending on its divergence regarding to this definition.

Mammary glands contain 75.000 alveoli/cm^3 in average. It is therefore impossible to detect tiny alveolus with bare eyes. 150-220 alveoli usually open into the same mammary ductule. Lobules ligate to larger mammary ducts and then turn into a form resembling a bunch of grapes.

The mammary ducts the lobules ligate to open into an udder cistern. The capacity of this main cistern in each udder is 100-500 g. In other words, the amount of milk in main cisterns of 4 udders is not more than 1-2 kg and most of the milk, that is why, is in mammary cells of alveolus prior to the milking. As a general information, it is safe to say that 10 % of the milk prior to the milking is in udder cisterns as the remainder is in mammary cells.

There is a passage wrapped with a strong muscle and called Furstenberg ring or sphincter between udder cistern and teat cistern in each udder. It has a role in preventing milk from streaming from udder cistern to teat cistern except for milking and calf feeding times, and in leading to milk presence in the udder, which obliges for the last milking. The last milking, that is why, is environmental rather than inherited, and associated with the proper milking.

Inner membrane of the teat cistern is covered in a mucus-like secretum. It prevents potential microorganism and other foreign matters getting into the udder. An injury to this surface at the time of milking or any other time paves the way for mastitis. The reason why the milk in the teat is taken to a separate cup is the probable contamination of the accumulated milk with microorganism.

The teat duct is approximately 1 cm in length and 4-8 mm in caliber. There is a close correlation between the width of this duct and the speed of milking.

Raised with dense rations potentially leading to lipoidosis at an early age, the heifers might excessively fatten in the udder, and that leads to fatty udder syndrome. According to the popular wisdom, excessively fattened udders have underdeveloped mammary glands, which lead to a decrease in milk yield.

6.3 Milk Formation and Release

The milk is synthesized in single-row epithelial cells covering internal surface of alveolus. Named as mammary cells, the epithelial cells in alveolus extract all the necessary materials from blood in order to synthesize the milk. The studies suggest that 300-500 liter blood must get through udders so as to synthesize 1 liter milk. It is out of question for cows with underdeveloped blood circulation systems to be rich in milk yield.

In fact, there must be a reference to the respiratory system in that a well-functioning circulation system calls for a well-functioning respiratory system. Otherwise, it is not possible for a sufficient amount of clean blood to get through the udder and other parts of the body. It is therefore highly important in terms of high yield to raise female breeding cattle in a clean and spacious environment and in open or semi-open barns without catching a disease, and house in favorable conditions.

Mammary cells obtain all required amino acids from blood so as to synthesize proteins in the milk. A considerable amount of energy is spent in a protein synthesis. That is the reason why the cows fed by rations poor in energy have a decreasing amount of protein in their milk. To sum up, if one would like to have a higher amount of protein in the milk, then it is a must to meet energy needs of milk cows with rations.

Saturated and unsaturated fatty acids are obtained through blood for the synthesis of milk fat. Unable to meet their energy needs with daily rations, the cows make use of fat masses in their bodies. You, however, cannot simply prevent the fat rate in the milk from decreasing. The cows must be fed with rations to completely meet their energy needs so as to decrease the amount of fat in the milk just like in the protein. This is, however, not only an issue of energy need. Balanced rations must be prepared and presented to meet the feeding needs of the cows.

Mammary cells must obtain the glucose in the blood in order to synthesize the lactose. The level of lactose in the milk is usually steady during the lactation even though it slightly decreases towards the end of the lactation. A decrease in level of lactose in the milk can be attributed as a major hint for a medical problem that an animal is going through.

All the minerals and vitamins in the milk are obtained from blood as well.

Mammary cells tend to constantly synthesize milk but the milk synthesis slows down and comes to a stop at a further stage if the udder is not drained at certain intervals (for instance,

twice a day) through milking or calves sucking milk. The reason is that the alveolus filled with milk put pressure on blood circulation system and thus leading to a slow-down in the system. If an udder is not drained for a few days, then it cannot produce milk as much as it used to even if it is milked later on. If it is not milked for three-four days, then the milk synthesis might completely stop and the cow would dry off. That is why the cows must be milked every day at certain intervals during the lactation, and this order must not be hampered at any cost. Otherwise, the milk yield would decrease or completely end.

Some extrinsic factors such as the existence and moves of a calf, massage to the udder and the sound of the milking machine lead to the stimulation of a cow. Oxytocin is secreted from hypophysis as a result of this stimulus, and this hormone gets through to the udder via blood circulation. The oxytocin getting through to the udder within 20-50 seconds following the stimulus causes a contraction of myo-epithelial cells and white muscles surrounding the mammary cells, and thus leading to a crack in mammary cells. The milk in cracked mammary cells pours into alveolus cavity. The oxytocin with a similar effect on milk transmission lines helps the milk get through to the udder cistern.

There is a little amount of milk in the alveolus cavities and the udder cistern even prior to the effect of the oxytocin. This milk is poor in fat since water, mineral matters, vitamins and proteins get through the membrane of mammary cells but large fat masses cannot. The mammary cells must crack so that the fat masses can get through the alveolus cavity, and this calls for the effect of the oxytocin. The milk produced in the first milking period is therefore poor in fat.

The adrenal gland steps in and secretes a hormone called epinephrine in an animal scared or in pain for one reason or another. This hormone mixing with blood has an opposite impact compared to the oxytocin slowing down the blood circulation and preventing myo-epithelial cells from contraction and hampers the milk yield and milk secretion. Even injecting oxytocin to an animal in such condition would not be effective at all since a sufficient amount of oxytocin cannot get through to the udder as a result of the slow-down in the blood circulation.

6.4 Milking and Milking Methods

There are three ways to milk it from an udder:

- Calf sucking
- Milking by hand
- Milking by machine

The best way to extract the milk from the udder is undoubtedly calf sucking. Milking by hand or machine is a bunch of imitations for calf sucking.

A calf squeezes the teat taking it between the tongue and the palate, and enables the teat passage to be opened. The milk, in this way, pours from the udder cistern to the teat cistern

and then to the mouth of the calf. The calf full of milk in mouth creates a sense of vacuum while swallowing. The differential pressure as a result of sucking and swallowing repeated 60-100 times a minute keeps going during the calf sucking period, and is accordingly lifted in dry-off periods.

The best method, in spite of numerous methods, in the milking by hand is considered to be the palm method. In this method, the teat is kept within the palm during the milking, as the teat ligament is compressed and opened with a thumb and an index finger. Other fingers are closed from top to bottom as the udder is compressed, and the milk in the teat is drained. In milking by hand, one must definitely avoid pulling the teat at both ends. Otherwise, the teats would be exposed to malformation in a short span of time, and their health would deteriorate.

Milking by machine requires four milking caps clinging to the milking claw are used. The interior parts of these caps contain a solid plastic and a soft rubber cover. The teat is compressed by exerting air pressure (38 cm/Hg) between these two covers during the milking (38 cm/Hg). The mammary duct in the interior side of the milking cap, in the meantime, contracts in a way to be closed. Relieving the air pressure leads to an enlargement in the mammary duct creating a sense of vacuum and enabling the milk accumulated in the teat cistern to stream.

The air pressure must be exerted in compliance with the frequency of calf sucking and the type of the machine for 40-80 times per minute. Carrying out this procedure at regular intervals calls for an automatic machine called pulsator or brain as breeders name it. One must avoid using machines with no pulsator. In addition, the settings of these pulsators must be checked to make sure they are regularly functioning. Out-of-order pulsators would harden udders and pave the way for mastitis.

The milking must be performed at three complementary stages:

1) Preparation: It is the stage where the teats are drained prior to the milking as the udders are disinfected, and the oxytocin is secreted to blood as a result of stimulation. It must not exceed or fall short of 60 seconds.
2) Milking: It is the stage following the preparation and when the milk is milked for 4-6 minutes. The cow must not be scared or be in pain at this stage.
3) Ending: It is the stage where the udder is massaged as the last drop is drained, and the udder is disinfected.

The first element to consider in the preparation of cows for milking is the classification of cows based on their medical conditions. One must make sure at first that they are fully healthy. Then problematic and sick cows must be milked respectively. A risk against the contamination is minimized, and the milking process is shortened.

Here are the things to do in the preparation process:

- The milk accumulated in the teat must be milked into a separate cup and disposed.

- A mastitis test must be performed at an interval of 2 weeks at the latest.
- The teats must be dipped into a cup containing a disinfectant that would not harm the udder and the milk and then disinfected (pre-dipping).
- It must be dried with a paper towel 30 minutes following the pre-dipping, and one must avoid using multiple-use materials.
- The caps must be mounted right after drying the udder in automatic stimulative milking systems. The caps of such machines massage for 30 seconds, and then the milking begins.

Extracting the milk accumulated in the teat, pre-dipping and drying off must take 60 seconds. That would provide a sufficient amount of time for the oxytocin to be effective.

Washing udders is not recommended unless they are too dirty since washing and drying them off would be a major waste of labor and time. Housing the cows in clean shelters and at least having udders clean are of major importance.

One must keep in mind that a part of the dirt as a result of washing and drying might mix into the milk together with water from the milking teats, and that could reduce the milk quality.

There would be no need for pre-dipping if the teats are cleaned with a disinfectant paper towel.

The cows successfully preparing for milking have a faster milk flow, a shorter milking process and a better yield. It is easy to milk such cows as well. Unprepared cows, on the other hand, have a fluctuating milk flow, a longer milking process, a low yield and a more difficult labor. In addition, the cows in such conditions are more likely to stiffen in teats and to catch mastitis.

Some of the milkers interviewed on the subject point out that the preparation stage is challenging and even a pipe dream, as the practice is not practical at all. It is actually quite easy to put into practice, and it must be definitely put into practice. For instance, here are things to do in 2x6 fishbone milking system:

- Milk it into separate cups starting from the first cow in the right side (or left)
- Pre-dip each cow.
- Dry with a paper towel.
- Milking by mounting the caps starting from the first cow.
- Follow the same procedure on the other side.

If the teats are full of milk, then it means that the preparation stage is completed. The milking caps must be swiftly mounted giving a start to milking. One must make sure that the milking caps must stand in balance in the udder without moving to the right or the left, rotating or climbing to the teat. It is totally wrong for a milker to multitask while milking.

Another point to consider in milking is blind milking. Called as empty milking, the blind milking is a method that is carried on after the milk flow drops down below 200 g. The blind milking harms the udder, paves the way for mastitis, shortens the milking process and productive life of cows and causes substantial financial losses.

Here are the causes for blind milking that is irrepressible even in successful business:

- The milker is well trained and knows what he is doing but the load is too much as it leads to setbacks.
- The milker does not know what he is doing or he is lazy. He avoids massaging for the last milk and waits for the machine to do so.
- The closer in automatic closer milking systems does not timely step in as it is out of settings.

When the milk flow is below 200 g per minute, then the caps must not be immediately taken out as one must slightly compress the milking claw and massage the udder at the same time. The milk flow consequently increases and thus leading to the drainage of the udder. When the milk flow slows down again, then the switch under the milking claw and the vacuum must be off, and the caps must be gently but swiftly taken out. Automatic milking with a closer system does not require an additional massage for the last milk since the milking caps put massage on it.

The teats must be disinfected through dipping and spraying right after the milking. This procedure minimizes the risk of catching mastitis.

Numerous companies have developed milking systems in an effort to make use of them in dairy cattle breeding enterprises. The selection for one of these systems depends on the business capacity, financial potential, barn structure etc.

The following criteria are useful to be considered in comparing various milking systems:

- A milking system must enhance the labor quality, and facilitate the labor
- It must be easy to mount
- Cost-effective
- Maintenance service must be affordable and safe

Current milking systems are divided into two categories as in bucket and milk piped systems. Bucket milking systems are divided into two as in mobile (portable) and stationary systems. Milk piped systems are divided into two as in intra-barn and milking room systems.

The most popular systems are mobile bucket and milking room systems. Mobile bucket systems are recommended for those with a capacity below 20 cows. A separate and favorable milking system is recommended for larger enterprises.

Increasing number of semi-open and free-stall barns has resulted in an increase in the number of milking room systems. There are 4 different systems that stand out among others. Here are the systems that have an edge over others:

- Fishbone milking systems
- Consecutive milking systems
- Parallel milking systems
- Rotating-platform milking systems

In consecutive systems, each cow can independently go in and out of the milking stall. Consecutive systems allowing for individual milking are in 2x2, 2x3 or 2x4 forms. Those with a larger capacity than 2x4 are not preferable as this procedure requires a very long space thus making it more difficult for labor and labor management since the height of each stall is 2.5 m. The consecutive milking system, therefore, is recommended for small and medium sized enterprises with a number of milkers below 100. There are two milking methods called fishbone and parallel systems in which cows are milked in groups and taken out of the milking parlors all together.

The fishbone milking system is the most common one around the world. It eliminates many below-mentioned disadvantages of the parallel milking system and necessitates a longer milking room for the same number of cows. The smallest type of the fishbone system is 2x2. Milking parlors with a larger capacity than 2x6 call for an enlargement of the milking pit so that a milker can see the cows, and they also require employment of more milkers. To sum up, the fishbone systems are ideal for medium sized enterprises.

The parallel system, calling for milking cows in groups and taking them out all together, makes it difficult to recognize the cows at the time of milking. It is not only difficult to mount the milking caps since the milking is performed between the rear legs but also unfavorable due to the fact that it is likely for a milker to smudge in excrement. It is not easy to clean udders at all. It provides the biggest advantage in enabling a large number of cows to be milked in a small space. It is not therefore recommended for large herds. The minimum limit is projected to be 2x20. The systems in which cows are milked on a rotating platform that completes one lap in 6-8 minutes are more expensive than others in terms of installation cost. This system, just like the parallel milking systems, is recommended for larger sized enterprises with a capacity of at least 500 milkers. The rotating milking systems are not that widespread in spite of all the promotional activities. The reason is that the length of milking process for cows differs from each other as it makes milkers passive and increases the costs.

6.5 Milk Structure and Quality

The required qualities for raw milk in Turkey are defined with 'Turkish Food Codex Communiqué on Raw Milk and Heat Treated Drinking Milk' published in the Official Gazette, dated 14 February 2000, numbered 23964. With some alterations in the following periods, this communiqué both defines quality elements of milk and designates required qualities for animals to be milked, stalls they will be in following the milking and milk processing facilities etc. Bearing resemblance with the regulation numbered 853/2004 and adopted by EU, this communiqué defines the standards regarding to milk quality as follows:

- The milk shall be clean
- It will be no different than its normal structure
- The number of somatic cells shall not exceed 500.000 pieces/ml
- The number of bacteria shall not exceed 100.000 pieces/ml
- It shall not contain any residual
- The freezing point shall be below -0,515°C.

According to the communiqué, the number of somatic cells shall be detected at least twice a month, and the results shall be delivered in a geometrical average of 3-month period. The number of bacteria shall be detected at least twice a month as well, and delivered in a geometrical average of 2-month period.

The communiqué yet to be implemented will be inevitably implemented in forthcoming years. The obligation does not only result from the implementation of similar communiqués in EU without compromising principles. The implementation of the communiqué is of major importance for human and animal health as well as their welfare and yield.

The implementation of the communiqué requires taking samples from each enterprise as a sample of daily produced milk at the interval of 15 days, analyzing them and registering the results in an accredited, reliable and impartial laboratory. This is the most challenging and expensive part of this procedure. The breeder, milk industry and public authorities must collaborate to set up such an infrastructure and operate it. It is advantageous to benefit from the experiences of EU countries.

The structure of normal milk is as it is in Table 6.1. As seen in the figures, the normal milk contains 88 % of water and that figure can vary between 84 % and 90 %. For instance, the milk with a 90 % of water or 2.8 % of fat is not considered normal.

Table 6.1 Structure of normal milk and acceptable figures for elements in normal milk (%)

Element	Average	Min.	Max.
Water	88,0	84,0	90,0
Dry matter	12,0	10,0	16,0
Fat	3,50	2,8	4,5
Protein	3,30	2,5	3,95
Lactose	4,80	3,0	5,50
Mineral matter	0,75	0,7	0,8

The milk produced right after the calving is called beestings. With a quite different chemical structure than the normal milk, the beestings is an extremely valuable nutrient for calves as it contains immunity matters. A calf, therefore, must drink beestings within the first couple of hours following the calving by hand or sucking, and this procedure must be continued at least for 3 days.

Table 6.2 Change in the chemical structure of milk within the first 11 days following the calving

Time (day)	Dry matter (%)	Fat (%)	Casein (%)	Albumen and Globulin (%)	Lactose (%)	Cinder (%)
1	24,6	5,4	2,7	12,4	3,3	1,2
2	22,0	5,0	3,7	8,1	3,8	0,9
3	14,6	4,1	2,2	3,0	3,8	0,8
4	12,7	3,4	2,9	1,8	4,5	0,8
5	13,0	4,6	2,5	0,9	3,9	0,8
6	12,1	3,4	2,5	0,7	3,9	0,8
7	13,1	4,1	3,0	0,6	4,5	0,8
8	13,5	4,3	2,7	0,6	4,9	0,8
9	13,7	4,3	2,8	0,6	4,9	0,8
10	13,5	4,3	2,6	0,6	4,7	0,8
11	13,5	4,3	2,7	0,6	4,7	0,8

As seen in Table 6.2, the chemical structure of milk within the first 3 days following the calving has some dramatic changes, and comes closer to the normal milk structure as of the 4th day.

The most changing elements are albumen and globulin within the first 3-5 days following the calving. Hovering below 12 % in the beginning, the share of these proteins swiftly decreases within the process and drops down below 1 % in the 5th day. In the same vein, the share of the dry matter decreases 50 % within the first 4 days.

The number of somatic cells in the milk is regarded as one of the most important indicators for udder health. As is known, the somatic cell count (SCC) is composed of the number of dead leucocytes and milk cells. The experts suggest that one can build following relations between the number of somatic cells and udder health.

- If SCC < 100.000, the udder health is pretty good in the herd of an enterprise. Hygiene studies must be carefully continued in such herds.
- In case of 100.000 < SCC < 200.000, the udder health is decent in the herd. Hygiene studies, however, must be planned and operated more meticulously.
- In case of 200.000 < SCC < 400.000, the herd health is at risk. The problematic and sick cows in the herd must be selected as a veterinary physician steps in to guide in this regard.
- If SCC > 400.000, a disease is evident in the herd. One must swiftly take measures and proceed with treatment programs.

Here are the measures to be taken in order to minimize the SCC in the milk:

- The milking unit must be regularly cleaned, and tires must be timely switched. The vacuum must be straight, and the pulsator must properly operate.
- Must comply with the milking method and hygiene.
- Must perform a mastitis test at the intervals of 2 weeks at the latest. The cows with mastitis must be cured and their milk must be disposed following the last milking.
- The barn must be clean and disinfected at least once a year.
- Must take measures against flies and parasites.
- SCC is higher in elderly compared to the young ones, and in those at the end compared to those in the beginning of lactation. One must keep available cows at various ages and periods in a herd so as to minimize the SCC in the daily produced milk.
- Cows and bulls genetically prone to mastitis must not be made use for breeding.

The number of bacteria is an indicator for how clean and hygienic the milking sites and materials used for milking and milk storage are. The bacteria is contaminated with milk produced out of healthy udders at the time of milking and afterwards. It is impossible to entirely prevent milk from being contaminated with bacteria but it is possible to minimize the amount of contamination. Here are things to do in this regard:

- The milk accumulated in teats prior to a milking must be taken into a separate cup and disposed, and the teats must be disinfected and definitely dried off.
- One must use paper towels to dry off the teats.
- All the materials that have contacted the milk must be pre-washed with warm water following the milking to prevent milk residuals from drying off.
- It must be disinfected with pressure warm water, alkaline and acidic disinfectants by turns following the pre-washing.
- It must be washed with plenty of water and then dried in order to prevent the disinfectant from forming a layer.
- Milk collection cups and tanks must be washed and cleaned in the same vein.
- The milk must be cooled up to +4°C right after the milking.

Cooling the milk subsequent to the milking substantially decreases the number of bacteria. It is possible to elucidate this with 3 instances and display it like it is in Figure 6.1.

- Instance 1 (BS_1): The number of bacteria is initially 15.000/ml and the milk is cooled up to +4°C in 2 hours as the number rises to 40.000/ml after 8 hours.
- Instance 2 (BS_2): The number of bacteria is initially 70.000/ml and the milk is cooled up to +4°C in 2 hours as the number rises to 360.000/ml after 8 hours
- Instance 3 (BS_3): The number of bacteria is initially 70.000/ml and the milk is not cooled as the number rises to 6.150.000/ml after 8 hours.

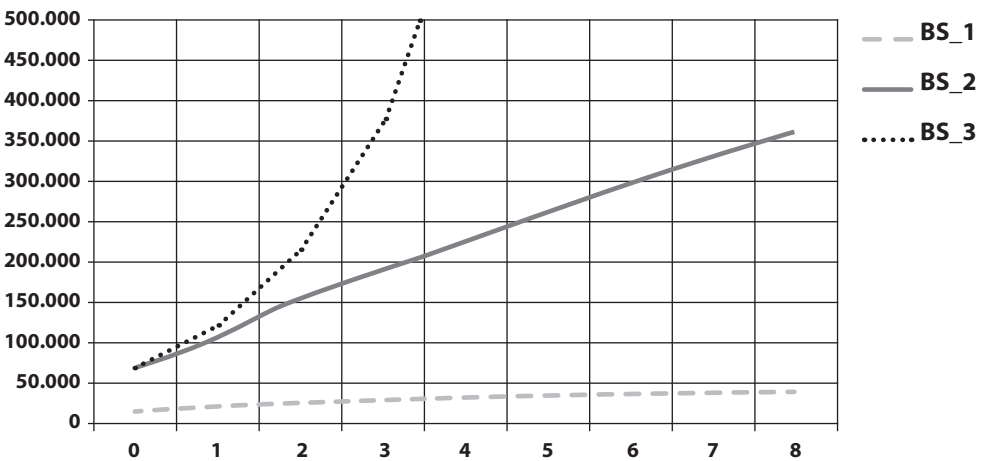

Figure 6.1 Change in the number of bacteria in the milk following the milking for three different instances

As seen in Figure 6.1, the milk containing 15.000/ml bacteria following the milking has 40.000/ml after 8 hours when it is cooled up to +4°C within 2 hours as the milk initially containing 70.000/ml bacteria has 360.000/ml bacteria afterwards. This means that the milk must be drained off the udder in a clean environment so that its quality can remain intact if it is swiftly cooled.

If it is milked under unfavorable conditions and the milk initially contains 70.000/ml bacteria, then it can reach up to 6.1 million bacteria load after 8 hours unless it is cooled. It is therefore not sufficient to provide high-quality milk following the milking. It must be immediately cooled in order to keep its quality intact.

One of the pre-requisites to produce high quality milk is to employ well-trained and highly motivated personnel. Studies point out that the motivation of the personnel is affected by appreciation, not by a higher salary. In other words, the personnel to work in barns must be well trained, experienced and appreciated by their superiors.

The freezing point of the milk is detected with a view to identifying whether any water is added to the milk. There are, however, some other factors having an impact on the freezing point of the milk, and the breeders yet to know about this might come across with unpleasant surprises. For instance, the cows the milk of which is drained in the first quarter of the lactation and with high yield are more likely to have a higher level of water. If the cows are let go to pastures, then the amount of water in the milk is quite high in springs when the grass is fresh. There are some cows that have a higher amount of water in the milk due to genetics when compared to others. The breeder must take a decision according to circumstances.

There are numerous factors affecting the amount of fat in the milk. Here are the measures to be taken in order to avoid reducing the fat average in a herd:

- The cows in the herd must have different lactation periods since the fat amount is low in the beginning of the lactation.
- The young and older cows must not be kept available together in a herd since the fat amount in the milk decreases with aging.
- The share in the ration for feeds rich in fiber must be increased, and the cows grazing in the pasture must be fed with dry roughage prior to grazing for supplemental purposes.
- The amount of concentrate feed provided for a meal in a business enterprise with no Total Mixed Ration in effect must not exceed 2 kg.
- The more frequent the daily milking is, the less the amount of fat in the milk is.
- The amount of fat in the milk of sick and weak cows decreases.
- The physical condition of a cow must be fine at the time of calving.
- The udder must be drained following each milking since the amount of fat in the milk, 2 % in the beginning, rises to 15 % following the milking.
- Those with a lower average of fat than the herd must be initially culled from the herd.

It is beneficial to go with the following recommendations in order to increase the amount of protein in the milk:

- The feeding with rations causing an energy deficit significantly decreases the amount of protein. This is quite common towards the end of winter. The lowest amount of protein is seen in winter, as the highest amount of protein would be in early summer.
- The amount of protein decreases as the daily milk yield in the lactation increases. That is why a herd must be composed of cows in various lactation periods.
- The heifers of cows with a high breeding value in terms of the amount of protein must be made use for breeding.

6.6 Lactation Curve and Persistency

The milk yield in a typical lactation period and the amount of fat and protein are seen in Figure 6.2. It is therefore possible to make following interpretations:

- The daily milk yield as of the early lactation is expected to increase and reach to peak in the 3rd-8th week of the lactation, and then decreasingly continue.
- The amount of fat and protein is expected to follow a course contrary to the daily milk yield. Both are expected to decrease in the first weeks of the lactation and slightly begin to increase as of the 10th-12th week.

The amount of lactose that is not displayed in Figure 6.2 is not expected to have a substantial variation. The amount of mineral matter however, is expected to have a slight increase towards the end of the lactation.

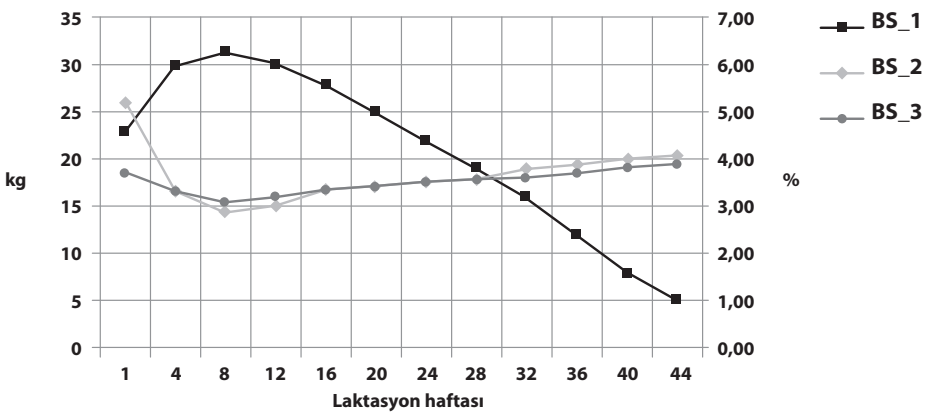

Figure 6.2 Daily milk yields and the amount of fat and protein in the milk for Holsteins during the lactation period

There is a significant relation between the daily milk yield at the peak and the 305-day lactation milk yield. The higher the milk yield is at the peak and the lower the variation in the milk yield is in the following periods, then the higher the lactation milk yield would be.

The capability to sustain the daily milk yield of lactation at the peak in the forthcoming periods of the lactation is called persistency. The cows with a decreasing daily milk yield are defined as cows with low persistency, which means they cannot sustain the milk yield. The cows are supposed to be high in persistency. There are lots of factors that have an impact on this quality with a medium inheritance as well as genetic and environmental factors.

It is possible to define the persistency in various ways. It is calculated as the ratio for the second 100-day milk yield and the first 100-day milk yield. For instance, a cow with a 2.600 kg yield in the first 100 days following the calving and 2.200 kg in the second 100 days would have a persistency that can be calculated as follows:

Persistency (%) = 100 * (2.200 / 2.600) = 85 %

As seen in the aforementioned arguments and instances, the higher the persistency is, the lower the lactation curve would be as it should be.

6.7 Factors Affecting Milk Yield and Structure

The milk yield is described as lactation, annual and life-long milk yield. 305-day lactation milk yield regarded, as a standard is rather preferable for genetic analyses as the annual milk yield is for analyses with financial purposes. The total amount of milk a cow has produced in an entire life is the most valuable information whereas it is not a common method since it can be measured only after death.

Lactation or annual milk yield is designated by genetic and environmental factors. The animal itself (genotype) and the breed are the genetic factors that differ in milk yield. The remaining factors are called environmental factors. To be knowledgeable with factors having an impact on the milk yield is of extreme importance in terms of making them effective in a desired way or minimize the negative impacts.

Before proceeding with factors affecting the milk yield, we will touch upon a common mistake that is committed related to impact shares of genetic and environmental factors. As is known, the inheritance level for milk yield is medium, and it is usually supposed to be between 0.20 and 0.40. Some of the breeders and site experts suggest that the genetic improvement is relatively insignificant when looking at this figure and one must focus on the improvement of breeding conditions. This is a wrong approach since the inheritance level points out what the share of genetic factors is in differing yields, not which one (genetic or environmental factors) must be improved at first. Besides, no matter how you improve environmental conditions, no animal can yield more than its potential. Providing an environment that is above what is necessary for animals with a low genetic potential would only increase the cost and thus leading to financial loss. Breeding animals with a high genetic potential in poor maintenance and feeding conditions is a waste for a breeder.

6.7.1 Breed and Genotype

Holstein, Brown Swiss and Simmental breeds that are the most common ones around the world are bred in Turkey as well. According to data of Cattle Breeders' Association of Turkey, 59 % of the cattle in Turkey are Holstein and its crossbreeds as 18 % is Brown Swiss, and 10 % is Simmental and its crossbreeds. The average milk yields of Holstein, Brown Swiss and Simmental breeds are 5.788 kg, 4.801 kg and 4.557 kg respectively according to the same data. The average milk yield of Jerseys is around 3.780 kg. The stats in Germany are made use with a view to forming an opinion related to Red Holstein, and the figures of 2009 are displayed in Table 6.3.

Table 6.3 Figures for milk, fat and protein yields of some breeds as well as the average age of the cows in the population and the average calving interval

Breeds	Cow (head)	Milk (kg)	Fat		Protein		Age (year)	Calving interval (day)
			%	kg	%	kg		
Holstein	1.398.600	8.668	4,07	357	3,40	298	4,8	417
Red Holstein	71.351	7.650	4,22	323	3,41	261	5,1	415
Brown Swiss	1.843	6.909	4,36	301	3,65	252	5,2	424
Simmental	14.541	6.742	4,21	284	3,49	235	5,1	396
Jersey	1.071	5.618	5,80	326	4,04	227	5,3	415

As seen in figures of Table 6.3, the Holstein-bred cows are significantly superior to other breeds in terms of milk, fat and protein yields. The Holstein, however, ranks the last in terms of the amount of fat and protein as the Jersey ranks the first. The Holstein ranks the last in terms of the average age of the cows in a herd. This means that the average lifespan for Holstein breeds is 3-5 months shorter than other breeds. The Brown Swiss has the most negative figures in terms of calving intervals as the Simmental breed cows have the shortest calving interval.

The difference in cows with same breeds is mostly more than a difference among breeds. For instance, some of the Holstein cows in Turkey have a lactation yield below 2 tons as others can yield 15 tons of milk. It is therefore wrong to select animals only by paying regard to their breeds. The right thing to do would be the selection of animals based on their breeding values. If it is going to be based on 'which one of these cows I should benefit from for a longer period of time in terms of milk yield', then the criteria must be the yield capacity, not the breeding value.

6.7.2 Environment

There are multiple environmental factors that can have an impact on the milk yield of cows. Here are the factors calling for the definite consideration of breeders.

Feeding

One of the basic conditions for yield from animals is to feed them in a fashion to meet their nutrient needs. A balanced nutrition for cows in the 3-4 weeks prior to the calving, and in the 4-8 weeks following the calving is of vital importance not only for milk yields but also for animal health and survival. When the nutrient needs are met in consideration with their rumination characteristics, they are able to make use of their genetic capacities and yield in milk to the utmost.

Malnutrition leads to changes in the chemical structure of the milk. For instance, first the amount of protein, then the amount of fat begin to decrease significantly when there is a shortage of energy in the ration. The amount of fat in the milk for cows fed with concentrate rations poor in fiber swiftly decreases.

The cows, following the calving, can reach to their usual feed consumption capacity only in the 8th - 10th week of the lactation. It is difficult to meet energy needs of cows with rations especially for those in the first lactation since their feed consumption is pretty low. The energy deficit as a result leads to a decrease in the amount of fat and protein for the milk. The cows lose weight since they try to meet their energy needs by making use of fat in their bodies. The cows begin to pull themselves together when the feed consumption is at a desired level. Their physical conditions and the amount of fat and protein in the milk recover, and it remains so until the end of the lactation.

The nutrition of female cattle in the growth period has a major impact on their yields in the future. One must definitely keep in mind that the milk yield for cows fattened in early puberty decreases 30 %. The reason is that the milk tissue cannot develop as a result of swift growth of the fat tissue in the udder. This is called meaty udder problem as well. To sum up, the breeders are subject to double punishments due to malnutrition and have financial losses due to both unnecessary expenses on feeds and the decreases in milk yield.

The First Calving Age

Another major factor for the milk yield of cows is the first breeding and calving age. Studies point out that the cows should not calve prior to the 24th month as the milk yield increases approximately 1 % for each month from the 24th month to the 36th month. This means that if a cow calving in the 24th month and yielding 5.000 kg milk in the lactation calves in a further month, then it can yield 50 kg and 100 kg milk if it calves in the 26th month. The first calving age is effective not only in the 1st lactation but also in other lactations. Those calving at an early age yield less in milk.

The studies, however, suggest that this increase cannot match the yield loss resulting from the late calving. In other words, the cows calving in the 24th month for the first time would have a higher yield in milk compared to others calving at a later age, and likely to calve more. The analysis, therefore, must be based on not only the lactation milk yields but also the life-long milk yields and calf yields. To sum up, the cows are recommended to calve for the first time in the 24th month. One must keep in mind that any delay following the 24th month would cause at least 100 TRY loss for a breeder.

Age of Cows and Lactation Order

The cows reach to the highest lactation milk yield at a mature age. The cows in fast-growing breeds such as reach to maturity when they are 5-6 years old. A cow calving for the first time in the 24th month and having 12-month calving interval in average is expected to reach to the highest yield in the 4th-5th lactations. According to figures in USA (Table 6.4), an

increase is foreseen until the 5th lactation in lactation milk yields. The milk yield is expected to decrease as of the 7th lactation.

Table 6.4 Relative variation expected in milk and fat yields depending on the lactation order

Lactation order	Milk yield	Fat Yield
1	100	100
2	111	110
3	120	119
4	123	121
5	125	122
6	125	121
7	123	120
8	121	118

This means that the lifespan and the length of productive life for cows must be 6-7 and 5-6 years respectively in order to make use of their capacity in milk yield. In other words, the herd renewal rate must hover around 20 %. Taking part in the best improvement programs, the business enterprises, however, must raise their herd renewal rates to 30-35 % to benefit from genetic developments and increase the genetic level of their herds, and accordingly push the length of productive life to 3-4 years.

Calving Month and Year

The variation in the feedstuff used in rations and the climatic changes depending on seasons are among major factors affecting the milk yield. A large number of studies point out that the cows calving in summer when the feed resources are relatively scarce and the weather is too hot, produce less than others do. A change in breeding conditions in a business enterprise from year to year (for instance, a change in the position of a keeper or a manager) might result in substantial variations in terms of milk yield.

Calving Interval

Having one calf a year is still a generally accepted rule in cattle breeding although to a lesser extent. The main factor differentiating the calving interval is the length of the service period since the pregnancy period does not vary that much. If the service period, defined as the time between the calving and the pregnancy, takes less than 85 days then the calving interval will drop down below 12 months. The lactation milk yield, therefore, decreases since this rules out 10-month lactation and 2-month dry-off period.

If the calving interval exceeds 12 months, then it translates into a financial loss since the life-long milk and calf yield decrease. In recent years, it is regarded normal if the calving interval in average is around 400 days in herds with a high yield in milk. Another point to be considered is that any delay in the calving interval for one day leads to approximately 10 TRY financial loss.

Dry-off

The dry-off period must take at least 1 month and ideally 2 months in order to be prepared for the next lactation. A cow calving prior to dry-off period is expected to have a 40 % less yield in lactation and have medical problems.

Bulk

One of the popular wisdoms among the breeders is that bulky cows produce much more milk than others do. Studies to date have identified no evidence to confirm this opinion. It is therefore totally wrong to select breeding cattle only by looking at the bulk of an animal. In fact, the bulky cows cause much more cost in daily feeds.

Daily Number of Milking and Intervals

A business enterprise milking twice a day must keep the interval between two milking equal. Otherwise, the milk yield would decrease. The studies point out that milking at the interval of 16 and 8 hours instead of 12 would decrease the milk yield 4 %.

As is known, the calves in the first quarter of the lactation suck the udders of their mothers 8-9 times a day and 4-5 times a day in the forthcoming periods. From this perspective, one can suggest that the cows can be milked 10 times a day.

Raising the daily number of milking from 2 to 3 is known to increase the milk yield. This increase, however, is more evident in cows with a higher yield in milk. A study points out that the cows yielding 20 kg milk a day with 2 milking increase their milk yield 10 % when the milking frequency is 3 times a day as those yielding 30 kg milk would increase the yield 30 %. In other words, milking 3 times a day instead of 2 would translate into only 2 kg increase in those yielding 20 kg milk a day and 6 kg in those yielding 30 kg milk a day.

The decision over milking twice a day must be meticulously taken and based on analysis results since milking more than twice a day will certainly increase the need for labor, time and expenses.

Udder Health

The annual loss in milk yield due to mastitis varies between 5 % and 25 %. It is reported that the annual loss in milk yield is 4.3 % due to mastitis in a country such as Germany, and 73 % of the business enterprises regard it as a major problem. Minimizing loss in milk yield and treatment expenses by preventing cows from catching mastitis in the first place, is a serious matter the breeders must definitely discuss.

Preparation for Milking and Compliance with Milking Process

A complete fulfillment of the milking process not only decreases the risk of mastitis but also increases the milk yield. The business enterprises complying with the milking process stipulating at least half an hour standing following the pre-milking, pre-dipping, milking, draining the last milk, dipping and milking reportedly have 5.5 % of mastitis in frequency as it is 10.3 % in others that do not comply with this process.

Regularly serviced milking machines are known to increase the milk yield up to 450 kg if the procedure is duly operated by well-trained personnel. In addition, duly milking helps increase both the milk yield of a cow and the level of persistency.

Highly-Trained Labor Force

It is a pre-requisite to employ well-trained and experienced personnel for attaining high quality milk yield. In fact, it is reported that the mastitis frequency in business enterprises employing regularly trained personnel is 5.8 % as this figure rises to 9.6 % in enterprises employing personnel with no training. In addition, it is reported that the well-trained labor force is much more productive and thus leading to milking 45 % more cows per hour when compared to those who are not trained.

Hoof Care

Hoof problems are proved to decrease milk yield around 20-25 %. This means that a cow yielding 5 tons of milk per year can yield only 4 tons of milk. 1 ton of loss per cow is tantamount to 10 tons of milk in a business enterprise with 10 cows. The loss per cow and accordingly total loss would be much more in a business enterprise with higher average of milk yield. When you add treatment costs to these losses following the diagnosis of a nail problem, the importance of the whole picture comes into focus.

Housing

It is necessary to provide cows with high-quality breeding conditions with a view to making use of their yield potential. This does not stand for making huge investments in barns. A barn to be built with cost-effective but high-quality materials must have a space where cows can freely walk, clean stalls for resting, a roof to protect from rain, snow and sunshine, a wall or a shade to keep safe from stiff winds, sufficient amount of quality water that cows can drink when required, and a feeder they can use all day along. One must keep in mind that yield potentials cannot come out into the open unless these cows feel at ease. For instance, a cow lodging for 14-15 hours a day can yield 15-20 % and 1.000 kg more than the ones lodging for 6 hours.

The amount of fat and protein in the milk is one of the primary criteria, which is decisive on milk prices in most of the developed countries. The amount of fat and protein, that is why, is supposed to be high. Such high amount, however, depends on genotypes of animals and environmental factors at the service of animals as well as the medical status.

References

- Akman, N., 1998: Practical Cattle Breeding. A.U. Faculty of Agriculture. Department of Zootechnics. Foundation of the Turkish. Union of Agricultural Engineers Publication. Ankara
- Akman, N., E.Tuncel, N. Tuzemen, S. Kumlu, M. Ozder, Z. Ulutas, 2010. Türkiye Sığırcılık İşletmelerinin Yapısı ve Geleceğin Sığırcılık İşletmeleri. TMMOB Ziraat Mühendisleri Odası. Ziraat Mühendisliği VII. Teknik Kongresi Bildiriler Kitabı-2. Ankara: 651-665
- Alpan,O., R. Arpacık, 1998: Cattle Breeding. 2nd Edition. A.U. Veteriner Fak. Zootekni Ana Bilim Dalı. Ankara
- Anonim, 2006. Türk Gıda Kodeksi-Çiğ Süt ve Isıl İşlem Görmüş İçme Sütleri Tebliği.
- Anonim, 2006. Sağım ve hijyen. DeLaval (Turkey)
- Anonim, 2007. Melktechnologie. http://www.delaval.de/Wissenswertes/ EfficientMilking /Milking_Technology.
- Anonimous, 2009. Melktechnologie. http://www.delaval.de/Wissenswertes/ EfficientMilking/ Milking_Technology.htm#Weshalb%20Stimulierung%20der%20 Zitzen?
- Anonimous, 2010. Trends Fakten Zahlen 2009. http://www.vit.de/fileadmin/user_ upload/ wirsindvit/ jahresberichte/ jahresberichte-2009/Gesamtausgabe_2009.pdf
- Fehlings, K., 2006. Melkanlagen, Melktechnik und Melkhygiene-Ursachenkomplexe, welche die Eutergesundheit beeinflussen. http://www.tgd-bayern.de/images/pdf/ fachvor/ melktechnik.pdf
- Gottschalk, A., H. Alps, E.Rosenberger, 1992: Praktische Rinderzucht und Rinderhaltung. BLV Verlagsgesellschaft mbH. Münschen
- Gravert, O., 1994: Milch. "Ed. H. Kräusslich, Tierzüchtungslehre". UTB für Wissenschaft. Verlag Eugen Ulmer Stuttgart: 196-212
- Karg, H., R. Claus, 1981: Laktation "Ed. H. Kräusslich, Rinderzucht". Verlag Eugen Ulmer Stuttgart: 211-223
- Kleinschroth, E., K. Rabold, J. Deneke, 1994. Mastitis. Euterkrankheiten erkennen, vorbeugen und behandeln. Top Agrar. Das magazin für moderne Landwirtschaft. Münster, Almanya
- Kumlu, S., 2004. Damızlık ve Kasaplık Sığır Yetiştirme. Türkiye Damızlık Sığır Yetiştiricileri Merkez Birliği Yayınları Yayın No: 3, Ankara
- Kumlu, S., 1991: Süt Veriminde Devamlılığın Hesaplanmasında Farklı Yöntemlerin Etkinliği ve Devamlılığı Etkileyen Unsurlar Üzerine Bir Araştırma. Ak.Ü. Zir.Fak. Dergisi, 4 (1-2),129-138
- Mackrott, H., 1994: Milchviehhaltung. Verlag Eugen Ulmer Stuttgart
- Ritterhaus, C., 2007. Arbeitszeit im Milchviehbetrieb.

- Ruegg, P., 2004. Managing from milk quality. University of Wisconsin-Madison, USA
- Sachallenberger, E, 2006. Eutergesundheit und Milchflusskurven. http/cms.wgmev.de
- Schindler, K., 2007. Durchführung des gemeinschaflichen und nationalen Lebensmittelhygienerechts auf dem Gebiet der Milcherzeugung
- Schlaiß, G. 2006, Klauenbad einfacher denn je Deutschland.Info@Delaval.com
- Stokka, G., J.F. Smith, J.R. Dunham, 1997. Lameness in dairy cattle. Kansas State University
- Tröger, F., 2007. Melktechnik und Melkhygiene
- Worstorff, H., 1996. Welcher melkstand und welcher Grösse?
- Worstorff, H., 1996. Gefrierpunkt der Milch
- Worstorff, H., 1996. Probleme und Trends: Melktechnik

7. CHAPTER Dairy Cattle Nutrition and Feeds

Prof. Dr. Murat GÖRGÜLÜ

7.1 Introduction

Dairy cattle farming are a field of activity that requires intense technical knowledge as it contains many activities such as raising of calves, heifers, cows, dry cows, insemination, birth, herd health, hygiene, milking, nutrition, feed preparation and feeding. If it is not carried out properly, inconveniences such as health problems, low productivity and high feeding costs reduce the profitability significantly. Most of the above activities are dealt with in other chapters of the book. This chapter, titled Dairy Cattle Nutrition and Feeds, addresses practical conditions and reviews relating to the feeding of calves, heifers, cows and dry cows, feeding systems, grouping, body condition scoring, metabolic problems, feeds and their general characteristics.

7.2 Nutrition of Cattle of Different Ages and Physiologic Status

7.2.1 Nutrition of Dairy Cows

Productivity of cows over the course of lactation and their corresponding needs for nutrients vary significantly (Table 7.1). Thus, phase feeding is preferred in practice in dairy farming (Figure 7.1).

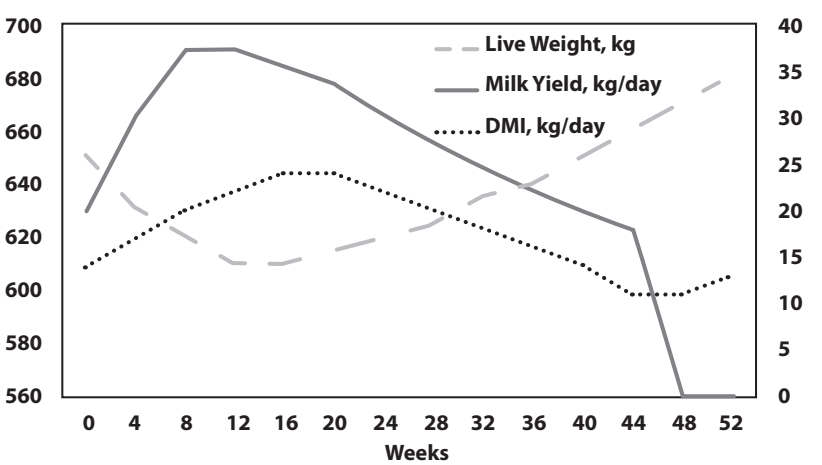

Figure 7.1 Changes in feed consumption, milk yield and live weight in periods of phase feeding

Table 7.1 Feeding guidelines for dairy cattle with different physiological conditions (NRC, 2001)

Laktation Period	Early Laktation		Number of days of milking= 90 days				Dry cow (270-day pregnant)	Heifer (300 kg)
Milk yield, kg/day	25	35	25	35	45	55		
DMI, kg/day	13,5	15,5	20,0	24,0	27,0	30,0	13,7	7,0
Net Energy, Mcal/ kg DM	2,07	2,22	1,36	1,48	1,54	1,60	1,05	2,27
RDP, %	10,5	10,5	9,5	9,7	9,8	9,8	8,7	9,4
RUP, %	7,0	9,0	4,6	5,5	6,2	6,9	2,1	2,9
CP, %	17,5	19,5	14,1	15,2	16,0	16,7	10,8	12,3
NDF, %	25-33	25-33	25-33	25-33	25-33	25-33	33	30-33
NFC, %	36-44	36-44	36-44	36-44	36-44	36-44	42	34-38
Ca, %	0,74	0,79	0,62	0,61	0,67	0,60	0,45	0,41
P, %	0,38	0,42	0,32	0,35	0,36	0,38	0,23	0,23
K, %	1,19	1,24	1,00	1,04	1,06	1,07	0,52	0,48
Na, %	0,34	0,34	0,22	0,23	0,22	0,22	0,10	0,08
Cu, mg/kg DM	16	16	11	11	11	11	13	10
Zn, mg/kg DM	65	73	43	48	55	65	22	27

DMI: dry matter intake, **CP:** crude protein, **RDP:** rumen degradable protein, **RUP:** rumen undegradable protein, **MP:** metabolic protein, **NFC:** non-fiber carbohydrate, **NDF:** neutral detergent fiber

Phase feeding is based on grouping and groups should be homogenous considering physiological status and production levels of cows. Among these groups, cows constitute a very particular group because of their physiological characteristics. Cows give considerable amounts of nutrients with milk. A cow that yields 30 kg/day milk which contains 35 g fat/kg, 32 g protein/kg, 40 g lactose/kg and 7.5 g mineral/kg releases 1050 g fat, 960 g protein, 1200 g lactose and 225 g mineral from its body each day. In addition to the nutrients needed for maintenance, nutrients released from the body (digested, absorbed and turned into milk) should be regained by the animals.

Milk yields of cows and fat and protein content of the milk may change considerably as lactation progress. Although it is not possible to monitor the daily changes, it is essential in herd management to know and make use of the periods in which changes are intense and notable changes occur. At this point, the basic criterion taken into account is the lactation periods. Lactation periods in which notable changes occur may be listed as follows:

- Period 1 (0-70 days; early lactation)
- Period 2 (70-140 days, mid lactation)
- Period 3(140-305 days, late lactation)
- Period 4 (Dry period)
- Period 5 (Transition period).

Period 1 (0-70 days):

This period is characterized by the recovery and preparation for a new pregnancy of uterus just after the birth and a continuous increase in the milk yield up to the peak level. This period differs from other periods in the sense that cows experience negative nutrient balance in the most severe manner in this period.

In this period,

- Milk yield escalates rapidly and reaches peak level in 6-8 weeks.
- Dry matter and nutrient consumption of cows generally fails to meet the requirement. Stability of the rumen and adaptation of the rumen to high concentrate diets should be rapidly ensured.
- In this period, it is difficult to meet particularly the energy requirement and cows use their body fats to do so. They lost condition severely. Condition loss should be minimized by regulating the feed consumption and ration content.
- Excess loss of condition increases the risk of ketosis. In order to reduce the risk of ketosis, glycogenic materials such as propylene glycol and calcium propionate can be used by starting from one week before the birth and during the first week following the birth. A cow can give approximately 7 kg milk with a live weight loss of 1 kg. A body condition score of 1 equal to a live weight gain or loss of 55 mi.
    - The desired body condition score is 2.5-3.5 in this period. Scores below 3 can be accepted for high yielding cows (>25 kg).
    - Condition loss should not exceed 1.5 point in the early lactation.
    - With a 1 point loss of condition, cows may produce approximately 350-400 kg milk.
- Severe negative energy balance in this period may lead to silent oestrus and repeat breeding problems as well as metabolic problems such as ketosis and fatty liver.
- Successful feeding and management may allow attaining both maximum milk and better reproductive performance.

- Peak milk yield can be accepted as 1/200 of the lactation milk yield. Therefore, 1 kg increase in the peak milk yield escalates the milk yield during lactation by 200 kg, whereas 1 kg decrease may reduce the lactation milk yield by 200 kg.
- High milk yield in the early lactation is very critical in the sense that feed consumption is insufficient, negative energy balance is severe, the cow is in the reproduction period and many problems (dystocia, retained placenta, milk fever, ketosis, acidosis, etc.) are encountered.

In order to avoid the impacts of severe negative energy balance in early lactation,

- Condition should be checked at calving (Hayirli et al., 2002; Garnsworthy et al., 2008),
- Ration protein should be reduced to decrease the body fat mobilization that may be caused by the protein-energy imbalance in the ration. (Schei et al., 2005; Garnsworthy et al., 2008),
- Energy level of the ration should be increased or its content should be changed (roughage-concentrate ratio, rations with different contents of starch and fat) (Garnsworthy et al., 2008),
- Long chain unsaturated fatty acids or CLA may be used in the ration to reduce milk fat synthesis and lower the energy level released with milk (Castaneda-Gutierrez et al., 2005).

These practices can affect lactation and reproduction performance by influencing the negative energy balance and metabolic and hormonal system on the hypothalamus-hypophysis-ovary axis (Gorgulu et al., 2011).

Main purpose in feeding the cows in the early lactation is to protect the health of the animal by minimizing the live weight loss and digestive disorders, avert falls in the milk yield, prevent metabolic problems following the birth, maintain a positive energy balance in the period 3-10 weeks after the birth and ensure a reproduction performance to obtain a calf annually, while meeting the nutrient requirements of the milk cow. Thus, the farming activity becomes more profitable.

Excessive loss of weight in milk cows in the early lactation may result in decrease in milk yield and repeat breeding rates. The first oestrus in healthy cows after the calving occurs within 15-25 days. However, the first oestrus and ovulation period may be delayed for 1 or 2 months depending on the severity of such undesired imbalances in milk cows in the early lactation. This increases the calving interval and average days in milk of the herd, leading to a reduction in average herd milk yield (Gorgulu et al. 2011).

Inadequate feed consumption is the most important factor on the negative energy balance of cows in the early lactation. Major problems caused by negative energy balance due to insufficient feed intake as follows:

- Depress immune system and increase in the risk of mastitis and uterus inflammation,

- Ketosis, increase in the risk of fatty liver and disruption of liver functions due to the use of body fat in the metabolism,
- Increase in the risk of displaced abomasum due to empty rumen as a result of inadequate feed consumption,
- Increase in problems relating to oestrus, ovulation and implantation of embryo to uterus, and decrease in repeat breeding,
- Insufficient mineral and vitamin intake due to inadequate feed intake may result in milk fever and some other metabolic problems (Gorgulu et al., 2011).

Feed consumption should be maximized as soon as possible in this period. Quality roughage, high feed consumption and nutrient level of the ration are basic means of mitigating the severity of negative energy balance. It is of greater importance for highly productive animals.

A successful feeding in the peak period

- maximizes the peak milk yield,
- allows the body fats to be used as a source of energy to a certain extent,
- minimizes ketosis, and
- brings the animal to a positive energy balance within 8-10 weeks following the birth.

In order to promote the dry matter and nutrient intake of cows,

- it should be ensured that they consume dry matter at least 3.5% of their live weight. Dry matter intake of lactating cows could be calculated with 2% of live weight and 30% of the 4% fat corrected milk yield. In other words, dry matter intake of a cow weighing 550 kg and yielding 25 kg milk with 4% fat content can be calculated as 11+7.5=18.5 kg. The requirement of the cow should be met with this dry matter (4% fat corrected milk yield= (0.4+0.15 Fat %) x milk yield, kg/day).
- at least 2.5% concentrate dry matter and at most, 1.5% roughage dry matter should be maintained in the ration due to high requirements. These values mean that at least 60% concentrate feed needs to be used in the ration in the early lactation (2.5/(2.5+1.5) =62.5%).
- roughages and concentrate should be mixed and given ad libitum (total mixed ration, TMR). Consumption of roughage and concentrate together (TMR) ensures a more stable rumen and may increase total feed consumption.
- When the concentrate and roughages were given separately, animals should not be fed with more than 2-3 kg concentrate per meal.
    - For instance, if a cow with 12 kg concentrate consumption requirement is fed twice a day, it should be fed with 6 kg concentrate at a time. However, consumption of this amount at a time may disrupt the rumen, leading to diarrhea and irregular feed consumption. Furthermore, animals standing close to each other in tied systems may consume the feeds of each other, resulting in further exacerbation of the problem.

- The number of feeding times can be increased if there is no other choice than giving the concentrate in a milking parlor or tied feeding line. Additional feed can be given at non-milking hours. In this case, the concentrate required to be given can be delivered in portions of 2-3 kg/meal.
- The most practical application so as to encounter less problems is to feed cows with a basal TMR prepared for the least productive animals in the herd (e.g. as if yielding 10-15 kg milk) and feed the animals requiring additional feed in two meals after milking.
    - Regarding additional concentrate, it is a generally accepted practice to give 1 kg concentrate for each 2 kg milk yield above the basal milk yield (10-15 kg milk yield).

- In order to reduce problems resulting from high concentrate, the ration (TMR) should contain at least 17-19% ADF and 28-32% NDF, and NFC level should not exceed 35-42% in this formula: (NFC(DM%)=100–(HP%+NDF%+Fat%+Ash%)).
- 0.5-1.0 kg/day of protected fat and 1-2 kg/day of oil seed can be additionally used to mitigate the severity of negative energy balance in highly productive cows that are in the beginning of lactation. Crude fat level, however, should not exceed 6% of the total ration.
    - Calcium (Ca) (0.9%) and magnesium (Mg) (0.3%) levels should be increased when particularly oil is used in the ration.
    - If general limits concerning fat use in the ration are exceeded, this could decrease the milk fat and protein.
    - Amount of bypass protein (rumen undegradable protein) in the ration should be maintained at upper limits (40%).
- In the total ration, 18-19% crude protein should be present in the dry matter, 60-65% of which should be degradable in rumen and half of this amount should be soluble protein. Animals can meet their energy requirement by mobilizing the fat reserves in their bodies. However, on the grounds that they are unable to meet their protein need from their own bodies, protein balance in their ration should be well-established.
- Urea should not be used in the ration in this period.
    - If the urea nitrogen level in milk is above 15 mg/dL, it indicates a problem with respect to energy and protein feeding. In addition, repeat breeding and pregnancy rate problems may be encountered.
    - Feeds with low energy and high protein increase the milk urea.
    - Excessive use of protein sources highly degradable in rumen in the ration increases the milk urea.
    - Fat use in the ration may increase the milk urea level as well.

- At least 20% of the roughage to be used in the ration should have coarse particles (4-5 cm) so as to keep the milk fat at a certain level after the birth, reduce the risk of displaced abomasum and digestive problems following the dry period.
- 1-2 kg of the roughage to be used in TMR can be supplied from hay chopped into 4-5 cm size. Another practice is to top dress supplemental hay in stalk form on TMR.
- It should be considered to give 100-200 g buffer (sodium bicarbonate, MgO) per animal in periods when high concentrate is used and particularly when only corn silage is used as roughage. Buffers can also be used at 0.50-0.75% ratio in TMR. Sodium bicarbonate and MgO can be used in mixtures having a ratio of 1:1.
- Roughages used in the ration should have a high quality. Roughage quality influences both the feed consumption and nutrient intake.
    - For instance, clover hay in the beginning of flowering contains 200 g/kg crude protein and 2 Mcal ME/kg, whereas wheat straw contains 40 g crude protein and 1.4 Mcal ME/kg. When given to cow, clover hay can be consumed up to 2.5% of the live weight, whereas wheat straw can be consumed up to 1.5% of the live weight. Therefore, a cow weighing 600 kg can take 3000 g/day crude protein and 30 Mcal ME/day by consuming 15 kg clover, or 360 g/day crude protein and 12.6 Mcal ME/day by consuming 9 kg straw. Energy and protein supplied from straw is far from maintenance energy (approximately 15 Mcal ME/day) and protein (400-500 g/day) requirements.
    - Both the amount of feed consumed and total amount of nutrients taken can be increased significantly with high quality roughages and reduce the need for concentrate.
- In total mixed ration, dry matter should be between 50% and 75%. More wet or drier feeds may decrease feed consumption. For instance, if cows fed TMR with 50% and 40% DM, dry matter consumption in cows receiving TMR with 40% DM may be lower by 1-1.5 kg, which means 2-3 kg fall in milk yield. The problem is the repletion of rumen due to feeds with high water content.
- Milk cows have 10-15 meal per day lasting 30-35 minutes each. Feed consumption behaviors and high nutrient requirements of cattle as well as the need to maintain the stability of rumen fermentation entail the ad libitum feeding.
- Cows have a chance to consume feed at least 20-21 hours a day (ad libitum feeding) and 50-70 cm bunk space should be supplied per cows.
- Roughage sources, roughage to concentrate ratio and energy sources (cereals and fat) in concentrate should not be abruptly changed. Abrupt changes may disrupt the balance of microbial flora in rumen, leading to digestive disorders.
- Waterers should not be further than 10-15 m from feed line. Quality and clean water should be supplied. At least 10 cm space per cow should be supplied. Cows with low water consumption have also low feed consumption. Water consumption should be 2-3 times of the dry matter intake in winters and 4-5 times of the dry matter intake in summers.

- Consumption of mouldy feeds may disrupt the digestive system and reduce feed consumption and milk yield. Moreover, it may result in spontaneous abortions. Hence, feeds should not be mouldy and feed bunk should be, therefore, cleaned every day.
- Healthy cows have their first oestrus within 20-25 days after calving. Insufficiency of energy (inadequate and unbalanced feeding) in the first 3 weeks of lactation may delay follicle development and thus the date of the first oestrus and first ovulation (Gorgulu et al., 2011).
    - Inadequate feeding and severe negative energy balance may decrease follicle stimulating hormones (FSH)in the blood related to follicle development, oestrogen related to oestrus, LH related to ovulation, and progesterone related to the implantation of embryo to uterus, protection and maintaining of pregnancy. In such cases, problems may be encountered such as delay in follicle development, oestrus and ovulation, and increase in early embryo losses.
    - High protein intake may increase early embryo losses. In dairy cattle farming, covering nutrient requirement in early lactation is of great importance in terms of the management of reproduction.
- On the other hand, as the cows in their first and second lactation period still continue to grow (because they have not reached adult live weight yet), maintenance energy, protein and mineral requirements should be calculated 20% and 10% higher, respectively, in comparison to adult cows.
    - Peak milk yield of primaparus cows should be expected to reach at least 75% of their mature peak milk yield. That is, if the peak milk yield of matures in the herd is 35 kg, peak milk yield of primaparus cows should be above 26 kg. If the peak milk yield is lower than those values, either the heifer raising program is failing or it means mature cows are not being fed sufficiently.
- Feeding area should be lightened at night to promote feed consumption.
- Salt should be kept at 0.5% in the total ration or 1% in the concentrate. Ration should also be supplemented with vitamin A, D and E.

Even if the insemination is performed in the first oestrus after calving, the success rate is below 40%. It is recommended that insemination is performed in the second or third oestrus of healthy cows. This allow to uterus involution to prepare their next pregnancy in a healthy manner. In this case, a success rate up to 60-70% can be attained. 40-45 days of voluntary waiting period is a good practice to improve reproductive and lactating performance of dairy herd.

Cereal-based nature of ration given during voluntary waiting period and the use of rations with high NFC content increase the production of hormones on the hypothalamus-hypophysis-ovary axis as well as the response of relevant tissues to such hormones. The use of a ration with high fat content following the voluntary waiting period and insemination may assist the cows in reaching a positive energy balance by both increasing the energy

content of the ration and decreasing the milk fat. Furthermore, fat in diets may encourage progesterone secretion. These conditions promote pregnancy rates and reduce early embryo losses. Recently, it has been emphasized that the use of NFC-based rations until insemination and the diets with fat after insemination to improve reproductive performance. This type of feeding is called **sequential feeding.**

Period 2 (70-140 days=Mid Lactation Period)

This is the period in which the feed consumption of animals reaches the maximum level (peak). It is the basic purpose to maintain the peak milk yield as long as possible in this period. Characteristics of this period and considerations required to be taken into account may be listed as follows:

- Cows are pregnant in this period.
- Nutrient intake begins to go over the requirement and milk yield begins to fall. Milk yield drops by 6% monthly from the peak level in primaparus cows and by 9% in multiparus cows.
- As requirements drop in this period of lactation, roughage percentage in the ration can be increased.
    - Amount of concentrate given to each animal should not exceed 2% of live weight. Amount of roughage is still important and should not be lower than 2% of live weight. This means the roughage/concentrate ratio can be brought to 50%.
    - Nevertheless, roughage and concentrate quality should not be lowered because decrease in milk yield may be accelerated after the peak. This adversely affects the lactation milk yield.
- If roughage and concentrate are given separately, animals should not be fed with more than 2-3 kg concentrate per meal. Yet, there is still a need for a significant amount of concentrate.
- High use of roughages recovers rumen health and reduces feeding costs.
- Protein ratio in the dry matter in the ration can be decreased to 14-16%. 65-70% of protein should be rumen degradable proteins. Hence, the use of NPN can be recommended as well.
- Cows begin to regain the lost body reserves.
- It is known that cows benefit more effectively than dry cows from the energy contained in the feed during gaining body condition. Thus, it is more rational to make cows gain condition as from the middle of the lactation period. This is another coercive factor regarding the requirement that ration quality should not be rapidly lowered after the peak.
- The desired condition score is between 2.75 and 3.25 in the mid lactation. Failure to attain such a level of condition in this period may preclude the cow from reaching the desired condition at the late lactation and in the dry period as well as leading to a rapid drop in milk yield.

Period 3 (140-305 days=Late Lactation)

This period differs from previous periods as it includes the days when the milk yield tends to decline. Milk yield begins to fall, the animal is pregnant and requirements can be easily met since the consumption is higher than the need. Concentrate to be given in this period is for supporting the milk yield and regaining the body condition lost in the first periods of lactation.

The basic goal in this period is to bring the animal to the dry period with a condition score of 3.25-3.75.

- Roughage ratio in the ration can be brought to 60%.
- Low quality roughages can be used.
- Protein level in the ration can be brought to 12-14%. 70-75% of this protein can be degradable in rumen.
- Urea can be used in rations, respecting the general rules.

Ration examples for cows at different yield levels are given in Table 7.2.

Table 7.2 Ration examples for cows having different milk yield.

Milk Yield (kg/day)	Concentrate 19 CP	Concentrate 21 CP	Wheat Straw	Clover Hay	Corn Silage	Beet Pulp
15	7	-	4	-	15	-
15	7	-	6	-	-	15
20	8	-	4	-	15	-
20	7	-	3	2	15	-
25	8	-	2	4	15	-
25	8	-	2	2	15	10
25	11	-	5	-	10	-
25	-	10	5	-	12	-
30	13	-	-	2,5	10	-
30	-	13	2	1	14	-
35	14	-	2	1	16	-
35	-	14	2	-	17	-

7.2.2 Feeding Dry Cows

The process of ceasing the milking of cows is called drying off. It is the period corresponding to the last two months of pregnancy, in which milking of cows is ceased to allow them to rest between two lactation periods. Some cows naturally reduce their milk spontaneously, while others continue to secrete milk so long as the milking process is not terminated.

Drying off is essential for preparing the cow for the next lactation period, ensuring easy calving and having healthy calves. Dry period is one of the crucial phases of lactation cycle for next lactation milk yield and foetal development. Dairy cattle need the dry period so as to prepare for the following lactation period. The critical point in feeding the dry cows is to prepare them for birth without escalating their body condition. The most important means of drying off the cows is the reduction or removal from the ration of concentrate during the week in which they are planned to be dried off.

Drying off

During drying off process, udder is completely drained off in the last milking of low-productive cows (<10 kg/day) on the day of drying off. Protective antibiotics are given and milking is ceased conforming to the necessary disinfection rules. Even if the cows are highly productive, it should be abruptly put an end to milking 60 days before calving. Udders are quite open to infections in this period. Hygienic conditions should be absolutely complied with. However, the following practices may be recommended for cows that are still highly productive (>15 kg/day) although 60 days are left to calving.

- Concentrate is reduced 1 or 2 weeks prior to drying off (70-80 days before calving).
- Water supply can be reduced if the milk yield is still high.
- Thus milk yield drops and milking is ceased in the next week.

Dry period

Secretory tissues begin to be regenerated when milking is ceased. Regeneration period of tissues secreting and storing milk in the udder is minimum 30 days. Colostrum production process before calving takes at least 15-20 days. These data indicate that at least 45-50 days are needed for healthy regeneration of the udder and sufficient production of colostrum. In the light of such information, it is clear that dairy cows need at least 45 days to regenerate their mammary glands. However, considering that milk secretion begins 2 weeks before calving, it is a general practice to dry off the cow 60 days before calving (Sbrensen & Enevoldsen, 1991). Keeping the dry period longer than 60 days does not significantly contribute to milk yield in the next lactation, while reducing the milk yield in the current lactation because the existing milk in the udder is not obtained. Furthermore, keeping the dry period long may result in the cows gaining excessive condition. Overcondition of cows in the dry period may give rise to birth problems and increases the risk of metabolic problems (retained placenta, acidosis,

bloat, milk fever, ketosis, etc.) after calving. A dry period of 8 weeks is sufficient to attain the highest milk yield in the next lactation for most of the dairy cows. Proper feeding in the dry period enhances the milk yield in the following lactation, improves the health of calves and assists in minimizing possible metabolic problems in the early lactation (Gorgulu, 2007).

Objective in the dry period

- Regeneration and preparation for the next lactation of the mammary tissue that produced milk for a long time and is exhausted,
- Healthy and sufficient production of colostrum,
- Healthier development of calves that need to develop more rapidly at the end of the pregnancy,
- Gaining of condition by cows that lost condition in the first period of lactation and preparing them for calving with a body condition score of 3.5-4.0,
- Minimization of metabolic problems (dystocia, retained placenta, ketosis, milk fever, acidosis, bloat, etc.) in the postnatal period through proper feeding and management,
- Adaptation of rumen to highly concentrated feed needed in the following lactation.

Dry period

Dry period consists of two phases in which the udder and rumen prepare for the new lactation. The first phase is the early dry period and cover the 5-week term after the cow is dried off. The second phase is the transition period in which predominantly the rumen and mineral metabolism prepare for the new lactation. The first phase of the 8-week dry period is the early dry period (far off), while the last 3-week phase is the transition period (close up). Transition period spans the 3-week period before and after the birth. Dairy cows are exposed to different physiological and hormonal changes in this period. Health problems of dairy cows in the period covering 1 week before and after calving are significantly associated with both lactation and reproductive performance (De Vires, 2006). Some different practices may be carried out in this period, depending on varying requirements in these periods. The first 5-week phase (far off) in which the cow is far from calving and the last 3-week phase (close up) of the dry period should be examined and treated separately in terms of dry period feeding.

Feeding in the early dry period

The basic point emphasized regarding the feeding of dry cows is to prepare them for calving, maintaining their body condition. The ration to be prepared in this period should aim to maintain the live weight, regain the body condition that was previously lost and could not be regained, regenerate the udder and supply the nutrients required for foetal development (Table 7.3). Feed consumption falls substantially in the dry period due to advanced pregnancy. By virtue of limited time and low feed consumption, cows can gain condition only to a limited extent in this period unless extreme rations are applied.

Table 7.3 Nutrient levels required to be contained in the rations of cows in early and late dry period

	Dry Period	
Characteristics	**Far off**	**Close up**
Live weight, kg	675	675
DMI, kg	14	10
CP, %	9,9	12,4
RDP, %	7,7	9,6
RUP, %	2,2	2,8
MP, %	6	8
NEl, Mcal/kg	1,32	1,43
NDF, %	40	35
ADF, %	30	25
NFC, %	30	34
Ca, %	0,44	0,48
P, %	0,22	0,26
Mg, %	0,11	0,4
Cl, %	0,13	0,2
Na, %	0,1	0,14
K,%	0,51	0,62
S, %	0,2	0,2
Vitamin A (IU)	80.300	83.270
Vitamin D (IU)	21.900	22.700
Vitamin E (IU)	1.168	1.200

DMI: dry matter intake, **CP:** crude protein, **RDP:** rumen degradable protein, **RUP:** rumen undegradable protein, **MP:** metabolizable protein, **NFC:** non-fiber carbohydrate

Excessive condition problem is rather experienced by cows that have a long service period and increased calving interval. Some researchers recommend to give a single, NDF-rich, low energy and protein ration (Janovick & Drackley, 2010), while some recommend to give a high NDF and low energy-protein ration in the first 5 weeks and escalate the nutrition level in the last 3 weeks (Beever, 2006; Ingvartsen, 2006), whereas some recommend to maintain the nutrition level escalated in the 3-week period before and after calving (Guo et al., 2007).

Foetal membrane intensifies and nutrient requirement of the foetus increases in the last stage of foetal development when calving is impending. In addition, the need for glucose, amino acids, fatty acids and mineral rises rapidly for milk synthesis after calving. Rapid fall in progesterone level, rapid increase in oestrogen level, rapid foetal development and fall in feed consumption occur simultaneously 2 weeks prior to calving. This is further intensified with inadequate feed consumption, which is not compatible with the profound need for nutrients that began with lactation, and results in a severe negative energy balance particularly with the beginning of lactation. Cows dried off at 3.25 condition and body condition at birth should be maintained between 3.5 and 4.0.

Recommendations for far off cows:

- It is easy to meet the nutrient requirements of dry cows. For instance, a mixture of clover hay and corn silage in 1:1 ratio on dry matter basis meets the nutritional requirement.
- Daily dry matter intake of dry cows falls up to 1.7-2.0% of their live weight. That is, dry cows' dry matter intake is approximately 10-11 kg/day.
- Dry cows need to be fed with concentrate that is 0.5% of their live weight for udder regeneration, healthy calves and sufficient colostrum production.
- Continuing to feed the dry cows with coarse roughages corresponding to at least 1% of their live weight is important in terms of filling the rumen and reducing the risk of displaced abomasum.
- Dry cows can be fed with 3-6 kg concentrate produced for dry period, depending on the quality of the roughage given.
- Roughage ratio in dry period rations can reach up to 70-80%.
- Rations based on legume forages should be avoided. This is because legume forages contain substantial amounts of Ca and low amounts of P, which increases the risk of milk fever. The most proper feeding that can be recommended for this period is rations based on the mixture of legumes and grass.
- ad libitum feeding with corn silage should be avoided. By virtue of its grain content, thus high energy content and small particle size, corn silage results in excessive condition, increasing the risk of displaced abomasum.

- Cows with excessive condition should be separated from the herd and fed with low energy feeds, as they are susceptible to metabolic diseases.
- Cows with insufficient condition should gain condition and be prepared for calving with a condition score of 3.5-4.0. However, condition gain should not exceed 0.25-0.50 point in this period.
- If different feeds, for instance, green forages and by product roughage are planned to be used in the lactation period, they should be given 3-4 weeks before the birth. Thus, the problem of adaptation to feeds may be eliminated.
- If restrictive feeding is being carried out, one should make sure that the requirements of the animal are met.
- Protein level in the total ration should be kept at 12-13% level.
- Calcium (Ca) intake of animals should be kept below 100 g/day in the dry period. If it is not possible to avoid high Ca intake in the dry period, strict attention should definitely be paid to the anion balance in the ration.
- Use of anionic salts (magnesium sulphate, calcium sulphate, calcium chlorine, ammonium chlorine, etc.) in the dry period rations reduces the risk of milk fever.
- Cation-anion balance (RCAB=(434Na+256K)-(282Cl+624S)) should be between -50 and -150 meq/kg.

Late dry (close up) period

Minimization of diseases and metabolic problems after calving is possible with a proper transition period. It is important, in terms of reducing possible metabolic problems of the transition period, to monitor the body condition score in the dry period. Early lactation feed consumption of cows with excessive condition in the dry period occurs lower than that of cows with normal condition (Hayirli et al., 2002). Moreover, excessive condition during calving increases the frequency of postnatal problems such as merits, ketosis, milk fever, cystic ovarian, retained placenta, absence of oestrus, and lameness (Ferguson, 2005). This gives rise to further intensification of the severity of negative energy balance, suppression of immune system and exacerbation of lactation and reproduction performance in the early lactation. Severity of negative energy balance reaches maximum level within 2-3 weeks after calving and stabilizes in week 8-10 (Thatcher et al., 2010). Hence, it is of vital importance to take managerial measures that will prepare the cows for this severe change in the transition period (in the 3-week period before and after the birth) and other necessary measures regarding nutritional requirements.

In a well-managed dry period, cows should be able to consume dry matter corresponding to 1.91% of their live weight 21 days prior to the birth and 1.3% of their live weight on the last day of pregnancy (Hayirli et al., 2002). Twin pregnancy, stress, first pregnancy, heat stress (Ferguson, 2005), increase of NDF, fat and rumen undegradable protein in the ration decrease

feed consumption 3 weeks before calving (Hayirli et al., 2002) and intensifies fat mobilization (Garnsworthy, 2007).

The essential point in transition period feeding is to ensure that the animals calve with a condition that will not cause dystocia and will maintain feed consumption before and after calving. Hayirli et al. (2002) suggested that feed consumption of cows with a condition score above 4 in the period 3 weeks before birth is lower relative to that of cows with a lower condition score. It is well known that such animals have a higher risk of being exposed to metabolic problems in early lactation (such as dystocia, retained placenta, merits, fatty liver, milk fever, etc.) (Mulligan et al., 2006).

On the other hand, some additives such as propylene glycol (glycogenic substance, Grummer et al., 1994), niacin (altering the glucose metabolism and fat mobilization, Drackley, 1993), protected amino acids (methionine, methyl donor, constituents of phospholipids and lipoproteins, NRC, 2001) and protected choline (participation in phospholipid and lipoprotein synthesis, NRC, 2001) can present remarkable results in terms of preventing rapid fat mobilization in early lactation, effective use of mobilized fat in the liver and other tissues, and hampering the fat accumulation in the liver. It may be paid attention to possible effectiveness of such additives under certain conditions. Research results, however, are not always consistent.

Ultimately, the cows in transition period decrease their feed intake by 30%, it is therefore, recommended to increase NFC content of diets to allow the adaptation of rumen microorganisms to lactation rations and rumen epithelia. This can also improve the metabolic profile. However, rations with low NDF and high NFC may only be recommended in the period 3 weeks before the birth. If NFC increase in far off diets may give rise to excessive condition and adversely affect the productivity and health of cows after calving (Rukkwamsuk et al., 1999). Dairy cows should be dried off with a condition score of 3.25-3.75 and it should be ensured that they calve with a score within this range (Studer, 1998). Ferguson (2005) reported that reproductive performance of cows that lost a condition score above 0.67 in early lactation may worsen. Besides, Garnsworthy and Jones (1987) argued that if cows with a relatively low condition are fed with a well-balanced ration they are able to yield as much milk as those with a high condition by more effective use of the energy of the feed relative to their body reserves, and that such type of animals may be "biologically more effective".

Suggestions for transition period (3 weeks before calving, close up);

- Dry cows should be fed with concentrate corresponding to at least 1% of their live weight 3 weeks before calving.
- Feeding the cows with dry period concentrate in the first 2 weeks of the transition period and with the mixture of milk feed and dry period feed or solely with milk feed in the last week ensures the rumen to adapt more easily to high amounts of high-

energy rations to be used in the early lactation. It may assist in avoiding acidosis, bloat, off-feed problem, excessive condition loss, ketosis and other metabolic problems.

- Use of dry period concentrate in the ration may reduce the risk of milk fever by virtue of an appropriate Ca:P ratio. Use of special feeds for dry cows is important for this reason.
- If different roughages will be used after calving, it is recommended to begin to use them before calving.
- It should be paid attention to use roughages with large particles in the transition phase of the dry period. This is because the risk of displaced abomasum increases due to the large volume created in the abdominal cavity by the released calf and foetal membranes. Therefore, repletion of rumen contributes considerably to the minimization of this risk.
- Cows should be fed with roughage with large particles corresponding to at least 1% of their live weight in the transition period.
- Cows with a condition score higher than recommended for the dry period (>4) have a feed consumption capacity lower than that of cows with normal condition. Thus, they are prone to metabolic problems suffered in the early lactation.
- K level of the ration should not be raised above 1% particularly in the dry period. High K and Mg in the ration may give rise to incidents such as dystocia, milk fever (parturient paresis) and retained placenta by decreasing Ca absorption or mobilization of Ca from bones.
- If the risk of milk fever is high in the herd and widespread in the farm, Ca consumption per animal should be limited to 60-80 g/day (0.5-0.7% in DM) and P consumption per animal should be limited to 30-40 g/day (0.3-0.35% in DM).
- Supplementation of the ration with vitamin A, D, E and Se in the dry period improves the calves' health and reduces the risk of retained placenta and mastitis. These vitamins and selenium is important in terms of a healthy muscle development and maintaining muscle tone.
- High mineral consumption should be avoided in the last period of pregnancy. Particularly mixtures containing highly concentrated buffer substances based on sodium should not be used.
- Salt consumption should be limited to 30 g/day level. High consumption of salt may boost the problems of water retention (oedema) on the body in some cows. This problem is more widespread particularly in heifers that are pregnant for the first time.

Nutrient contents of rations recommended for dry cows and average nutrient contents of two different roughages (on dry matter basis) are given in Table 7.4.

Table 7.4 Different examples of rations that can be used in dry period feeding

A cow weighing 600 kg and consuming 10-12 kg dry matter	Rations, kg/day						
	1	2	3	4	5	6	7
Dry Period Feed	4,0	4,0	3,89	4,5	4,5	4,0	4,5
Clover hay	2,5	0,0	2,65	2,5	1,5	2,0	1,5
Wheat straw	1,0	4,0	3,45	4,0	3,0	5,0	0,0
Corn Silage	9,5	10,0	3,00	0,0	6,0	3,0	13,0

7.2.3 Nutrition of Calves

Calves are the future of a dairy cattle farm. It is the basic objective of dairy farms to obtain a calf from each cow and raise them in a healthy manner. However, many farms may fail to attain this objective due to various reasons. Considering particularly economic losses of farms in which calving interval extends up to 460 days, the importance of calf raising can be more clearly understood. In the case that dairy cattle enterprises which fail to obtain a calf from each cow due to various reasons do not pay sufficient attention to raising the calves, their profitability decreases substantially by reason of calf losses reaching up to 15%. Thus, strict attention should be paid to each stage of calf-raising from management to feeding because they are the potential breeding material of the future.

Prenatal period

More than 60% of the foetal development of a calf before its birth occurs in the last 3 months of pregnancy (Matthews, 2002). Insufficient and unbalanced nutrition in this period results in the obtainment of feeble calves. In this sense, calves born in autumn and spring in hot climate regions are a good example. Calves born in autumn have a lower live weight compared to those born in spring in these regions because insufficient feed intake of cows exposed to heat stress in the last period of pregnancy results in feeble calves being born. Studies indicated that future performance of feeble calves remained at low levels as well (Barker, 1996; Caton et al., 2007; Gardner et al., 2009). Inadequate foetal development may result in decrease in past natal growth and mature performance. The concept that links the stimuli from the mother resulting from by different environmental conditions (diseases, undernourishment, temperature stress) with the risk of diseases in later life of the young is defined as **foetal** or **developmental programming** (Vonnahme, 2007).

Undernourishment in the foetal period may affect considerably the economy of the farm by causing the retardation of the age of puberty, first breeding and first calving age (Rees et al., 2002). Furthermore, health problems to be encountered in feeble calves and associated treatment costs and possible low productivity are other critical factors required to be taken into account in terms of the farm economy (Schillo et al., 1992; Martson et al., 1995). Hence, it should always be borne in mind that having a healthy calf in the birth is only possible with a healthy nourishment of the dry cow.

Things to do at birth

Above all, the cow that is about to calve should be put in the calving pen1 week before the expected date of birth. It is important that the calving pen is equipped with the necessary assistive tools and equipment and prepared in accordance with necessary hygiene rules for the moment of birth and following period, and it is another critical point in reducing calf losses to provide an employee trained on calf care in the postnatal period.

Figure 7.2 Measurements immediately after the birth of a calf

- Birth should be performed in a healthy manner and the calf should not suffer any harm,
- Oral and nasal mucosa of the calf should be cleaned after the birth to relieve its breathing,
- If the calf has swallowed some liquids during the birth, a massage should be given to the calf with circular and soft movements and its respiration should be stimulated to discharge the liquid,
- Umbilical cord should be disinfected, tied and cut off (Figure 7.2)

- The calf should be fed at least 2 litres of quality colostrum in the first half an hour after the birth and fed manually with colostrum twice a day for three days in a controlled manner.

Things to do in the first 3 days after the birth

Calves can begin to produce their own antibodies only after the tenth day of their lives. In the first ten days of their lives, calves need to receive the antibodies from colostrums so as to be able to cope with diseases. Consumption of sufficient amount of high quality colostrum on time has a basic role in the development of natural (passive) immunity by the calf. Although colostrum delays the development of active immunity in calves, it is crucial for protection from diseases in the neonatal period (Blecha 1988; Blood and Radostits, 1989). Immunoglobulins in colostrum are 80-85% IgG, 8-10% IgA and 5-10% IgM. IgG and IgM eliminate the germs that enter the blood circulation through macrophage (systemic infection) (Logan, 1996). IgA inhibits microbial attachment to epithelia of the body organs (such as small intestine and lungs) and prevents the entrance of antigens into circulation. Colostrum also contains very strong antitrypsin factors that inhibit the effect of trypsin but do not affect chymotrypsin (Dogan et al., 2007). This prevents the immunoglobulin in the colostrum from being affected by proteolytic enzymes, while adversely affecting the digestion of other proteins. Apart from immunoglobulin it contains, colostrum has more energy, proteins, vitamins and minerals compared to normal milk. Its dry matter content is approximately 2 times higher than normal milk.

Colostrum contains approximately 6% immunoglobulin. Newborn calves need to take at least 100 g IgG in the first half an hour after the birth. The cow continues to produce colostrum for the first 3 days and colostrum turns into normal milk in the 10th-11th milking (Dacis and Drackley, 1998). Studies indicate that calf immunoglobulin levels differ from each other and 41% of calves are below 1000 mg/dL (Sellers, 2001). Calves with a blood immunoglobulin level of above 1000 mg/dL have a higher vitality (Sellers, 2001).

Antibody content of colostrum varies depending on factors such as the nourishment of the mother particularly in the dry period, its immune system and stress (Logan, 1996; Flesh, 1982). Moreover, the time of feeding the calf with colostrum is important as well; if it is waited for the calf to stand up and suckle, the calf's immunoglobulin level may remain at low levels due to insufficient intake and absorption.

Highest level of immunoglobulin absorption occurs only until a few hours after the birth. Immunoglobulin absorption falls significantly 12 hours after the birth. It is very low 24 hours later. Thus, it is of vital importance for the calf to consume the colostrum as soon as possible after the birth. Immunoglobulin in the colostrum should be absorbed directly without being digested. Absorption of immunoglobulin decreases with the time passing after calving (Figure 7.3).

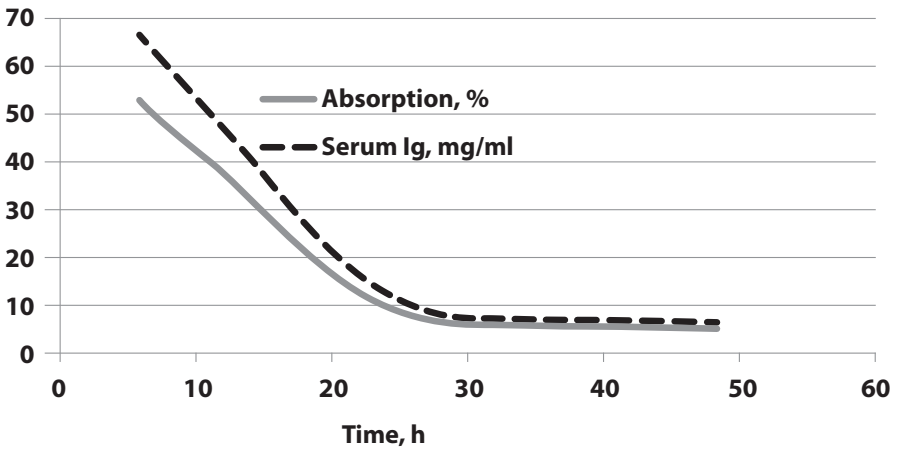

Figure 7.3 Change in Ig absorption from the calf intestine and in serum Ig level with time elapsed after the birth

Enzymatic activity of the intestine epithelia and digestive system of the calf allows absorption of such macromolecules without being digested only in the first 24 hours. As time passes after calving, both the level of immunoglobulin in the milk and the capability of intestines to absorb antibodies decrease. Multiparus cows have a higher level and more types of antibodies in their colostrum. Amount of immunoglobulin in the colostrum increases as the cow gets older and go through different diseases (Table 7.5). There are also commercial vaccines that increase the amount of immunoglobulin in the colostrum when applied a few weeks before calving. Production of antibodies against certain bacterial and viral antigens may be stimulated by this way. Amount of immunoglobulin is low in highly-productive and frequently-milked cows.

Table 7.5 Changes in IgG in colostrum by parity (Kehoe, 2011).

Number of lactations	Ig G(mg/ml)
First	83,5
Second	92,9
Third	107,4
Fourth and above	113,3

If pregnant heifers are brought to the herd from another location immediately before calving, they and their calves are exposed to some new types of microorganisms they have not been exposed to before. In this case, newborn calves are unable to receive the necessary antibodies against such microorganisms from their mothers. Use of the colostrum of multiparus cows or mixed colostrum of other cows in the herd may be recommended in such cases.

An Holstein calf should be fed with at least 2 litres of colostrum within the first half an hour following the birth and the same amount should be given again 4-6 hours later. Despite the efforts to make the calves suckle from their mothers to receive the colostrum, more than half of the calves are unable to take in a sufficient amount of colostrum. So, it may be recommended to feed them through the use of a baby bottle or oesophageal feeder. Thus, it is important to milk the colostrum and feed the calf with it in a controlled manner in terms of making sure that the calf has taken in a sufficient amount of colostrum and preventing the future problems related to its immune system.

Colostrum can be frozen for storage and used when required after being thawed in 38-40°C water (Dogan et al., 2007). It may be stored in 2-2.5 L. serum bags or plastic bottles. Feeding the calves of heifers brought from other regions or countries with the stored colostrum of multiparus local cows may reduce the risk of health problems in these calves.

It is beneficial to use stored colostrum and commercial products reinforced with immunoglobulin in nourishing calves. This is because colostrum contains immunoglobulin with macrophages effect as well as the immune body (IgA) that attaches to surface epithelia and prevents pathogen microorganisms to attach on the epithelia. Microbial diarrhea risk can be, thus, reduced in calves continuing to be fed by colostrum or commercial colostrum preparations in the first weeks of their lives.

Period from colostrums feeding to weaning

Following the colostrum feeding process, dairy cattle farms should prepare an appropriate milk feeding program for the period between birth and weaning. Uncontrolled feeding of calves with milk may trigger diarrhea incidents. Feeding the calves with high amounts of and/or cold milk can also increase diarrhea incidences. Furthermore, too much milk reduces the consumption of starter and decreases rumen development. Particularly in cold winter days, necessary measures should be taken to preclude the milk from getting cold while carrying it from the milking parlor to the calves' barn.

Different milk feeding programs are available for the milk feeding period. The first program recommends farmers to give increasing amounts of milk in the first 5-6 weeks and reduce the amount in the remaining weeks of the 8-10-week weaning period. In practice, however, giving different amounts of milk to calves born on different dates is dependent on the application precision of calf nurser, and expected results may not occur even if the nursers implement a milk feeding program varying weekly according to live weights. The second program involves giving of the same amount of milk throughout the milk feeding period, corresponding to 10% of approximate birth weights (40 kg), in two meals after the third day. Thus, 4 kg milk can be delivered in two meals daily from the 4th day to weaning (35-56 days) except for very feeble animals. In these applications, calves consume approximately 120-224 kg milk including the colostrum until weaning (Table 7.6). A standard amount of milk, for instance 2 litres per meal, given until weaning ensures rapid development of the calf

in the beginning. As the application of 2 L per meal in the first days of the program, which seems excessive, is unable to completely meet the requirements of the calf in the next weeks, it will provide an advantage as an application encouraging the orientation of the calf towards starter. Rumen development is thus encouraged.

Table 7.6 Feeding Program before Weaning

Age	Birth weight: Lower than 40 kg	Birth weight: Higher than 40 kg
1st Day	Colostrum: At least 1.5 L in the first half an hour, 1.5 L. 4-6 hours later	Colostrum: At least 2 L in the first half an hour, 2 L 4-6 hours later
2nd-3rd Days	Colostrum: 3 lit./day in two meals	Colostrum: 4 L./day in two meals
4th-7th Days	Milk or milk replacer 3 L./day in two meals Calf starter: ad libitum Water: ad libitum	Milk or milk replacer: 4 L/day in two meals Calf starter: ad libitum Water: ad libitum
8th-56th Days	Milk or milk replacer: 4 L/day in two meals Calf starter: ad libitum Water: ad libitum	Milk or milk replacer: 4 L/day in two meals Calf starter: ad libitum Water: ad libitum

Calves can be fed with diluted colostrum, mastitis milk and acidified milk successfully. If extra colostrum is available, it can be dilated in 1:1 or 2:1 ratio and used instead of milk. If mastitic milk is used, calves need to be kept separately and individually. Organic acids are used to acidify the milk. Organic acids are antimicrobial and antifungal substances. Additionally, calves consume acidic milk slowly. As the milk and digestive system is acidified, pathogens are unable to function in an acidified digestive system, diarrhea incidents fall. Use of acidified milk may be recommended for farms suffering frequently from diarrhea. Organic acids that may be used in an attempt to acidify the milk are formic, acetic and propionic acids (Gorgulu, 2007). Organic acids can be used at 1-3 ml/L level corresponding to a pH level of 4-4.5 in the milk.

In some calf raising programs, it is reported that alternative resources such as skimmed milk and whey can be used as well. Nevertheless, as their nutrient levels are not sufficient, they have to be used in superfluous amounts and may adversely affect calf development when mixed with milk.

If calves are fed with high amounts of milk for a long time, their forestomach (rumen, omasum and reticulum) cannot develop as their solid feed consumption will fall after weaning. While feeding the calf with liquid feed, it should be prepared for transition to solid feed following the first week after the birth. It is of great importance for the rumen development, which is a critical for the healthy development of the calf, to make roughages

and starter available in front of the calf in the liquid feed period. A newborn calf has one active stomach (abomasum) consist of 60% of total stomach capacity and rumen is underdeveloped yet (Figure 7.4), whereas 60-65% of the total volume of stomach consists of rumen and only 20% consists of abomasum at 3-4-month age. In adult cattle, rumen capacity can reach up to 80%, while abomasum capacity may fall up to 8-10%.

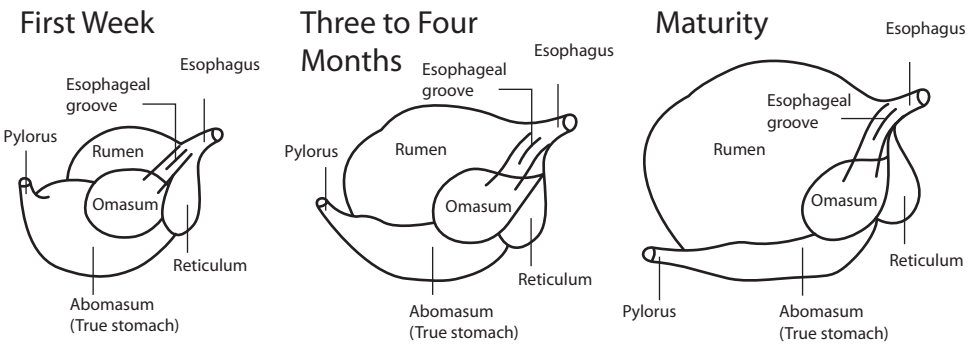

Figure 7.4 Rumen in cattle of different ages

Healthy weaning of calves is only possible with sufficient consumption of roughages and concentrate and development of rumen that can make use of such feeds (Wardrop, 1961). The impact of solid feeds on epithelial tissue development stems from volatile fatty acids in the rumen. These fatty acids are acetic acid, butyric acid and propionic acid. The order of these fatty acids from the one promoting epithelium development the most is as follows: butyric acid > propionic acid > acetic acid. Butyric and propionic acids are produced more when animals are fed with starter or high concentrate diet. Acetic acid is produced to a large extent in those fed predominantly with roughages. This accounts for the fact why concentrate promotes rumen papillae development more. In addition, butyric acid is known to increase the mitotic index (proliferation of cells) on the epithelial tissue of rumen. Furthermore, volatile fatty acids produced during fermentation in the rumen may contribute to better nourishment of animals by increasing the blood flow into the rumen epithelium.

A good calf starter should be cereal-based and have a protein at least 18%. Textured starter may encourage feed consumption and rumen development as well. Feeds in the form of pellet, rolled and flake ensure more effective rumen development and more feed consumption. As long as the calf remains on milk, the rumen remains undeveloped. High milk intake decrease starter and roughage markedly and this adversely affects the development of forestomach. Therefore, milk bypasses the rumen via the esophageal groove and passes directly into the abomasum. Reflex action closes the groove to form a tube-like structure, which prevents milk or milk replacer from entering the rumen to the abomasum. This reflex is an interesting mechanism preventing the milk, which is actually a very high-quality nourishment, from being fermented in the rumen. Calves can consume 0.5-0.7 kg/day calf starter feed in the 4th week and 1.5-2.0 kg/day in the 8th week. In 8-week feeding programs

where calves are fed with clover hay and calf starter feed separately and freely, average starter feed and clover hay consumptions occur at the levels of 0.8-1 kg/day and 0.1-0.2 kg/day, respectively (Goncu et al., 2010).

In the milk feeding period, calves should receive high quality calf starter that is largely based on cereals as from the first week. Quality roughage such as clover hay can be supplied from the first week. They ensure the calf to become accustomed to solid feeds and start the development of their forestomach. Development of the forestomach is the volumetric expansion of the forestomach complex (rumen, omasum, and reticulum) and increase in the length of epithelia. Volumetric expansion of the forestomach and increase in the length of epithelia may contribute to rapid development of calves particularly after weaning by enhancing both the feed consumption and absorption of volatile fatty acids from rumen (Thorp et al., 2000).

Bloat may be seen from time to time in calves when they are fed with starter containing high cereal having highly degradable starch if cereals are finely ground. Additionally, acidosis caused by high intake of concentrate and carbohydrates may lead to deformation of rumen epithelia. Therefore, it may be recommended to use cereals ground coarsely or rolled and flaked forms (textured feed). Pellet or texturized form of starter may prevent the problem emphasized above.

It was observed that the use of merely starter with milk prior to weaning (without hay) did not adversely affect epithelia development of rumen and they consumed high amount of feed after weaning compared to calves fed with milk, roughages and starter simultaneously. Therefore, it may be said that there is no need for roughage before weaning. This recommendation should not be interpreted that feeding calves with roughage should be avoided. There is no effect on calf growth when calves fed with roughage beside starter. Water should be freely given to calves as from the first week. Water received from milk is not enough to meet the requirements.

Considering the digestive system development of calves, it is clear that calves are not fully ruminant until weaning and thus a feeding program needs to be applied taking into account this consideration while meeting the nutrient requirements. Therefore, issues such as the time and duration of milk fed period and solid feeds before weaning and their quality are crucial.

Feeding with milk replacer

It is possible to feed and raise calves with milk replacer. A point required to be paid attention to regarding milk replacers is the quality of it. It is essential that milk replacer is based on milk and milk products and do not contain vegetable protein sources. Quality milk replacer should contain at least 24% crude protein and 15-30% fat. If vegetable protein sources are used much, feeding-induced diarrhea incidence may rise because the capability of milk replacer to curd in abomasum falls and the amount of nutrients passed to intestines without being digested increases (Waterman, 2005).

Liquid feed can be prepared by using at 150-200 g milk replacer/L (Gorgulu et al., 1998). The price of this liquid feed should be compared with the price of 1 litre milk while deciding on the use of milk replacer. The use of milk substitute feed even under equal conditions may provide advantage if the amount of milk to be sold is so high that it provides bargaining power. However, it would be more appropriate to prefer whole milk if we are not sure about the quality of the milk replacers.

Milk or milk replacers are practically given to calves in buckets but can also be given through the use of feeding bottles and nipple buckets. In the milk feeding period, fresh and clean water should be supplied each day from the first week. Milk buckets may be used to supply water. In this case, however, attention should be paid to hygiene and disinfection of tools and equipment used in feeding calves once a week.

Weaning

In dairy cattle farms, factors such as duration of milk feeding, amount of milk given, live weight and age of the calf and amount of solid feed consumed are taken into account while deciding on the weaning of the calf (Hodgson, 1965). However, age of calve and amount of solid feed (calf starter) consumed by the calf are paid regard to as a general practice (Keles et al., 2011). In practices, calves can be weaning 8 weeks old or sometimes 4-6 weeks (early weaning). In early weaning (4-6 weeks), more attention should be paid to comply with requirements regarding the quality of the starter given to calves, sheltering conditions and other hygienic conditions (feeder, waterer and milk bucket, bottle) (Goncu et al., 2010).

- Weaning age can be determined according to whether the calf is able to consume 700-800 g calf starter daily for three consecutive days. Practical experiences indicate that this amount of consumption occurs in calves over 35-day old.
- Considering the starter feed consumption, it may be said that calves can be weaned in 35 days. However, it should not be forgotten that the practice of early weaning can be applied in farms with superior technical and knowledge infrastructure. In cases where milk prices are high, it may provide advantage if the farm conditions are appropriate. Moreover, early weaning provides advantage in farms where births are concentrated in some periods in an attempt to use of calf hutches more frequently.
- In terms of practical conditions, a weaning practice applied in 55-60 days is preferred.
- Some calves may be allowed to consume milk for a longer period, considering their live weight and health condition and the current season. However, this should not be a generally preferred practice, considering the above-mentioned reasons.
- Calves can be weaned between 35-56-day old according to milk prices and their growth performances.
- Calves should be gained 300-600 g/day live weight in the period before weaning. If the development of calves is lower than those values, it should be checked

whether there is anything restricting the feed consumption, and the quality of the concentrate should be questioned as well.

- Use of acidified milk can be considered in farms where calf diarrhea is frequent. Organic acids (1-3ml/L) such as acetic acid, formic acid, propionic acid and lactic acid can be used in the acidification process.

Weaning causes stress in calves. So, it should be monitored whether their development and feed consumption meet the desired live weight values. Furthermore, other stress-inducing changes such as dehorning, transition to group raising, abrupt alteration of feeding system should not be carried out during weaning and they should be done before weaning or long time after weaning to give a chance to adopt the stress caused by weaning.

7.2.4 Heifer Nutrition

Heifers are the future of a dairy farm as they are the herd replacement material and heifers sold have a significant role in profitability. In dairy cattle farms, herd replacement rate varies in the range of 10-30% and they prefer to raise their own heifers. Herd replacement is a consequence of low production, health problem or slaughtering the cow due to other problems. Increase in the herd replacement rate decreases productivity in the herd and adversely affects profitability. Therefore, it is of great importance for the profitability of the farm to keep the herd replacement rate in the acceptable range (18-22%). Another herd management decision influencing the herd replacement rate is herd expansion or heifer sales. It has a determinative role on the profitability of the herd because high (sale of all heifers) or low (use of all heifers for herd replacement) number of heifers sold throughout the year creates substantial differences in the input of the enterprise.

Herd replacement rate falls if breeding heifers are decided to be sold. Otherwise, if it is decided to retain the breeding heifers, in other words, to expand the herd, then the herd replacement rate will rise. Increase in the herd replacement rate means an increase in the number of young animals with low productivity (primaparus cows produce milk 75% of that of adult cows), which decreases the overall productivity (Renkema & Stelwagen, 1979). This is because milk yield of young animals is lower than that of adult animals (>3rd lactation) by 25-30%. In the raising of heifers, the basic aim is to;

- ensure them to reach puberty in proper time (proper live weight),
- ensure them to reach the live weight, height and body weight to their breed standards in calving age,
- ensure them to reach first calving with a size that will not adversely affect udder development and milk yield,
- ensure cost effective production.

It is essential taking into account the fact that requirements and physiological characteristics of female calves vary at different ages considerably. Heifer-raising programs

should consider these changes. In this sense, it is beneficial to examine the process from birth to first calving in three main periods as follows:

- Pre-weaning period (0-2 months),
- Period between weaning and puberty (3-10 months),
- Period between puberty and calving (10-27 months)

These periods are of great importance in assessing heifer-raising program implemented by the enterprise. The ages, sizes and other properties to be attained for heifer raising program are given in Table 7.7. The most important factors determining the milk yield of heifers can be listed as the size of udder tissues secreting milk and conditions provided for the heifers (Peron, 1984; Valentine et al. 1987).

Table 7.7 Development and Feed Requirement of Heifers at Different Periods

Periods	Age, Month	Weight, kg	Height, cm	LWG, g/day	DMI, kg/day	Concentrate, kg/day
Birth	0	35-40	75-80	--		
Weaning	2	65-75	80-85	400-600	0,6-0,9	--
Control weighing	6	140-150	90-95	600-700	3,0-4,0	1,5-2,0
Puberty	8-10	200-225	100-110	600-700	5,0-6,0	2,0-3,0
Control weighing	12	260-275	115-120	700-900	6,0-7,0	2,0-3,0
Breeding	15-18	325-415	120-125	700-900	8,0-9,0	3,0-4,0
First calving	24-27	520-560	130-135	700-900	9,0-11,0	4,0-5,0
After calving	24-27	460-500		--		
Adult live weight	48-51	550-600		--		

Amount of secretive tissues in the udder varies depending on the genotype of the animal and conditions provided in the udder development periods.

- Udder development in heifers follows an allometric (2-4 times faster development relative to the body) course prior to puberty.
- It follows an isometric (proportional to the body) course before weaning and after puberty.

Studies conducted both in the U.S. and Denmark indicated that the increase in the development rate of young heifers prior to puberty may reduce their milk yield in the first lactation by 10-20% (Swanson, 1960). Heifers may have a weight of 200-300 kg at puberty

depending on their breed and adult live weight of the herd. Farmer should be careful in feeding young heifers until they reach a live weight of 200-300 kg and in deciding their growth rate (Pirlo et al., 1996; Boyd, 1977; McDonald, 1980).

A live weight gain rate above 800g/day before the puberty, in which udder development is allometric, results in occupation of the milk secreting tissue (parenchyma) by fat tissues and growth of a large udder containing a low ratio of secretive tissues. First lactation milk yield may be reduced when heifer had high daily gain before puberty (Swanson, 1960). However, studies indicate this undesired effect disappears in the following lactations. Influence of feeding in the foetal period on udder development was revealed by many studies. On the other hand, it should be ensured that heifers calve at 24-27 months of age. Therefore, 15-18 month old heifers should be bred or inseminated for the first time. It is of great importance to select an appropriate sperm or bull for easy calving to prevent calf losses and facilitate calving (Brown et al., 2004)

The first calving age later than the recommended age (24-27 months) adversely affects the profitability by leading to an increase in the number of heifers required for replacement in the milking herd. The overall number of calves and amount of milk obtained lifelong are higher for the heifers calving at 24-27 months of age compared to those calving at a later age, as they remain in the herd for a longer time. For instance, the rise of first calving from 24 months to 28 months in a herd with a culling rate of 30% increases the number of heifers required to maintain the size of the herd by 10%. In the reverse approach, the reduction of the first calving age from 27 months to 24 months in the herd means a 10% increases in the number of sellable heifers and creates a huge difference in terms of profitability. In a herd containing 100 animals, a 1 month change in the first calving age changes the number of heifers required for herd replacement by ±3 (Brown et al. 2004).

Retardation of the first calving age affects the profitability of the enterprise by resulting in a longer retention of heifers that can actually pass to the productive period earlier and thus an increase in raising costs. Implementation of feeding programs arranged according to the growth periods in the heifer-raising program can create considerable differences with respect to the reduction of heifer-raising costs and enhancement of profitability.

Prenatal Period and Pre-Weaning Period (0-2 months):

Although daily gain prior to weaning does not affect the adult period performance, it is evidenced that adult period performance of calves born in autumn and spring vary, and that milk yield of females born in autumn, whose mothers were pregnant in summer, is lower than that of calves born in spring. That is, dry cow feeding has a serious impact on adult period performance of their offsprings. Besides, unfavorable caring and feeding conditions before weaning can intensify the severity of these effects (Rhind, 2004).

Colostrum feeding of female calves before weaning is vitally important for their health. It should be ensured that calves are raised in line with a program requiring them to drink

milk corresponding to 8-10% of their birth weight. Calves should be fed with high quality calf starter as from the first week. There are different calf-raising programs according to which weaning can be performed at different periods. However, it is recommended that breeding female calves should not be weaned before 8 weeks. When calves fed with 4 litres milk and 600-900 g calf starter feed daily, they can gain approximately 300-600 g/day live weight. Since udder development is isometric with the body in this period, the impact of calf growth on adult milk yield is not negative. On the contrary, rapid growth rate of the calf creates a positive impact by increasing the amount of secretive tissues (parenchyma) in the udder.

Dehorning of calves should be performed preferably within 1-2 weeks before weaning and extra teat in udder should be removed in this period.

From weaning to Puberty (3-10 months; 65-200 kg Live Weight):

Udder development in heifers is not proportional to, and occurs faster than, the body development in the period between weaning and puberty when they reach a live weight of 200-250 kg. It is known that keeping the live weight gain above 700-800 g/day reduces the amount of parenchyma (secretive) tissues in the mammary glands and results in the occupation of secretive tissues by fat tissues (Brown et al., 2004). A reduction of 500-1000 L may be observed in the first lactation milk yield in such cases. Therefore, it is beneficial to group young heifers by their similar characteristics in this period.

It is advantageous to shelter young heifers in groups particularly in these periods. It is possible to divide young heifers into two groups:

- 3-6 months of age
- 6-10 months of age

From weaning until 6 months of age, in other words up to reaching a live weight of 140-150 kg, rumen is still not fully developed in terms of functions and capacity. Furthermore, as the young heifer is still growing, the use of quality roughages and concentrate in this period is crucial. Calf grower should be used until 6 months of age and concentrate produced for heifer should be used after this age. Clover hay harvested at the beginning of flowering and mid-flowering and grass hay are quality roughages to be used for heifer. Furthermore small grain hay small grain+vetch hay, vetch and, sainfoin hay can also be used for feeding heifers successfully.

Heifers at 3-10 months of age can consume dry matter equal to 2.2-2.8% of their live weight. This ratio is greater in small animals. As the live weight increase, the feed consumption proportion to live weight tends to decline. It is recommended that 30-50% of diet is concentrate. As the concentrate ratio varies depending on the age of animals and quality of the roughages used, adjustments should be done accordingly. Concentrate ratio should be increased in young animals and when low quality roughages are available. The recommended amount of calf grower for the period of 3-6 months of age is 1.5-2 kg/day. Good quality roughages can be used at an amount of 1.5-2 kg per animal. It is also possible to use roughages ad libitum. Amount of calf grower can be increased by 1-2 kg if low quality

roughages are available, such as straw. Heifers at this age can be fed with hay and straw at an amount of 1.5-3 kg/day.

Heifers at 6-10 months of age can consume water-rich feeds as well. If they are planned to be fed with water-rich feeds (meadow grass, silage, pulp), they should be used after the 6th month. If there is no other choice, they can be used after the 4th month as well. However, they should definitely not be given to animals younger than 4 months of age. Meadow grass, silage and pulps can be used in the rations of heifers above 6 months of age without hesitation. In the presence of a good quality meadow, nourishing the heifers with 1-2 kg heifer concentrate will produce satisfying results. Green fodder, silages and pulps can be used at 3-6 kg range for heifers at 6-10 months of age by considering the ration balances (DM, ME, CP and minerals). On the other hand, insufficient live weight gain prior to puberty may slow down the development of pelvis and cause dystocia during first calving. Heifers fed sufficient and a balanced diet during early age may reach puberty earlier, while their cycles occur more regularly and prominently, and reproductive performance may be better (Rhind, 2004).

Puberty – Calving (10-27 months; 250-550 kg Live Weight):

Live weight gain that will not lead to excessive condition after reaching puberty ensures both the heifers to reach adult live weight in a healthy manner and have healthy and large size of mammary tissue. Udder development after reaching puberty is proportional to the body development (isometric), and high daily gain in this period does not have detrimental effect to udder development contrary to pre-pubertal period (Petitclerc et al., 1999)

Undesired effect of rapid daily gain in heifers following the puberty arises only out of excessive condition. If heifers are undernourished after reaching puberty, their growth requirement will still be high in the first and second lactations and they will use a significant portion of the nutrient intake for growth, resulting in a lower milk yield compared to those growing normally.

Malnourishment in heifer after puberty may cause;

- Use of nutrients for growth,
- Low feed consumption of underdeveloped heifers,
- Underdeveloped heifers do not consume enough feed due to dominance between herd mates and result in low milk yield and increase the variations in the herd.
- Moreover, as the live weight of heifers comes closer to 550 kg, their lactation milk yield rises; as their live weight rises over 550 kg, their lactation milk yield falls. Heifers calving with 570 kg live weight produced 800 kg more milk than those with 400 kg live weight.

On the other hand, heifers with excessive condition have both low lactation performance and may suffer from dystocia. Additionally, Overconditioned heifers may be prone to metabolic problems such as fatty liver, ketosis and low feed consumption such as high yielding but overconditioned cows

Live weight gain recommended for this period varies between 700-900 g/day depending on the overall condition of heifers. A live weight gain above 900 g/day after reaching puberty can be tolerated prior to the 6th-7th month of pregnancy. However, a live weight of 900 g/day and above should definitely be avoided in the last 3 months of pregnancy. It is preferred that heifers reach the calving date with a body condition score of 3.75. A condition score above 4 may increase calving and postpartum problems. Heifers can be inseminated at 14-15 months of age but their live weight should not be below 340-360 kg (60% of their adult live weight). Apart from live weight, heifers' height at withers is also important in terms of avoiding any calving difficulty (Reid et al., 1964). It is recommended that heifers should be bred/or inseminated when they reach 125-130 cm wither height. So, it can be ensured that they calve at 23-24 months of age. Studies indicate that ensuring Holstein heifers to give birth to their first calves at 23-24 months of age is ideal in terms of their herd life and lifetime productivity.

Heifers should gain 180-220 kg live weight during their pregnancy. These data indicate that live weight of cows may vary between approximately 520-580 kg at birth. Approximately 60-70 kg of the live weight gained after breeding consists of foetal development, foetal membranes and liquids. Heifer in last trimester of pregnancy should be fed such as dry cows (Petitclerc et al., 1999). Heifers should be slowly accustomed to postnatal rations. Rumen capacity of heifers is limited relative to that of cows, and higher quality rations should be supplied. Na and K intake should definitely be restricted in order to avoid udder oedemas. Na and K levels in the ration should be kept below 0.15% and 1.4%, respectively.

Basic knowledge and Recommendations for feeding of heifers;

- Heifers should be grouped according to their size. Particularly when restricted feeding is applied, large ones may consume the feeds of tiny ones.
- Daily live weight gain of heifers at 3–12 months of age should be between 600-800 grams.
- Heifers should be subjected to weight control at 3 or 6-month intervals in order to see whether their nutrition and development are at a desired level.
- Excessive feeding should be avoided particularly at 6-12 months of age (800 g daily gain should not be exceeded). Otherwise, mammary tissue may fatten and this cannot be rectified by later feed restriction.
- Puberty occurs when the heifer reaches 40% of its adult live weight, whereas the first breeding starts when the heifer reaches 60% of its adult live weight.
- As cows reaches their adult live weights after the 4th lactation, heifers should attain 80-85% of their adult live weight at the first calving.
- Rump height and width are indicators of bone development and easy birth for heifers as well as of appetite in the milking period. The recommended rump height for Holstein cows is 135 cm at the first insemination and 147 cm at the first calving.

- Bringing heifers to 500 kg live weight instead of 400 kg without overconditioning them at the age of first calving increases the milk yield significantly. This is because heavy heifers are able to consume higher amounts of feed and use the nutrients for milk yield as their growth requirement is less compared to light heifers.
- Heifers can be fed like dry cows 60 days before the birth. However, they should be segregated from dry cows, if possible.
- It is necessary to restrict the amount of salt in the ration of pregnant heifers. Otherwise, they may develop udder oedemas.

Feeding program for heifers

- Heifers at 3-4 months of age should be nourished daily with 2-3 kg good quality fodder and 2 kg calf grower containing 18% crude protein and 2600 Kcal ME per kg.
- Heifers at 5-6 months of age should be nourished daily with 3-4 kg good quality fodder and 2-3 kg calf grower containing 16% crude protein and 2600 Kcal ME per kg or 2-3 kg good quality fodder + 1 kg corn silage + 2-3 kg calf grower.
- Heifers at 7-12 months of age should be nourished daily with 5-8 kg good quality fodder and 2-3 kg heifer feed containing 16% crude protein and 2600 Kcal ME per kg or 3-4 kg fodder + 2 kg corn silage + 2-3 kg heifer feed containing 16% crude protein.
- Pregnant heifers at 13-20 months of age can be fed with 9-15 kg green fodder (or 9-10 kg corn silage) and 2-3 kg heifer feed containing 16% crude protein and 2700 Kcal ME per kg.
- Heifer in last 60 days of pregnancy may consume 10-14 kg feed as fed basis (fodder, silage + concentrate feed mixture, heifer feed with heifer in the first month and fed with milk concentrate in the last month). Concentrate can be increased up to 6-8 kg in the last month.

7.3 Metabolic Disease

Nutritional imbalances, deficiencies, or erratic management of feeding programs for dairy cows can cause large numbers and various types of health problems generally categorized as metabolic diseases.

Stress caused by metabolic disorders may suppress immune system functions. If such problems are not prevented, milk yield and reproductive performance may fall significantly.

Nutritional related dairy disease can be divided into 4 groups:

- Disorders related to energy metabolism.
- Disorders due to low cellulose intake or acidosis.
- Disorders related to the mineral (Ca, P, Mg) metabolism.
- Other disorders related to nutrition

7.3.1 Disorders related to energy metabolism

Fat Cow Syndrome

This syndrome mostly emerges a few days after calving and is seen in dry cows that are dried off for a long time and consume high amounts of energy in the dry period (Morrow, 1976). Cows that gain excessive condition (BCS>4.0) and fatten in the dry period consume less feed after calving than those with normal condition (BCS=3.5). Cows excessively conditioned become more prone to some metabolic problems such as milk fever, ketosis, displaced abomasum, retained placenta, metritis, dystocia and fatty liver.

Symptoms of fatty cow syndrome resemble to those of ketosis. Loss of appetite and a general weakness are common. Decrease in feed consumption gives rise to the mobilization of the fat that is too much for the liver to metabolize, leading to an increase in ketone bodies and fatty acids concentration in the blood, and fat in the liver. That is, fatty liver syndrome may appear as well.

Body condition score should be maintained around 3.25-3.75 in the dry period so as to avoid fat cow and/or fatty liver. Cows should be fed according to their condition score and the amounts of concentrate should be controlled if necessary. It is recommended to consult a veterinarian if the syndrome appears.

Ketosis

It is a metabolic problem frequently seen in the early lactation when it is challenging to meet the energy requirement of lactating cows. It may be associated with other metabolic problems (retained placenta, metritis, and displaced abomasum). Particularly the 6-week period after calving is problematic in high yielding cows. Generally it appears in the first 3 weeks after calving. The ketosis appearing in consequence of the failure to meet the energy requirement in the early lactation is primary ketosis, whereas it is called second ketosis if it appears together with other metabolic problems and factors leading to a fall in feed consumption.

Animals do not have appetite before and when ketosis appears. So, they begin to lose live weight, rumen activity slows down and obstipation appears. They look weak and bad, and their milk yield drops. Their movements slow down, skin looks rough and eyes are transparently cloudy. Their breath may smell acetone. Death of cows due to ketosis is very rare (Garrett and Oetzel, 2007).

As mentioned above, ketosis is observed in animals suffering from negative energy balance. Fall of the glucose level in the blood initiates mobilization of fat tissues. Mobilized fatty acids are transformed into ketone bodies in the liver, kidneys and lungs. Ketone bodies are acetoacetic acid, betahydroxy butyric acid and acetone. Increase of the ketone bodies in the blood of ketotic cow leads to an increase of ketone bodies in the urine and milk. Concentration of ketone bodies in the urine and milk is checked to diagnose the presence of ketosis.

Any measure stimulating the feed consumption can be listed as protective measures. In this sense,

- Use of some feed additives may be considered to cope with stress conditions appearing in the postpartum period:
  - B complex vitamins,
  - 60-100 g brewer's yeast,
  - 100 g baker's yeast for 10 days,
  - 3-6 g Aspergillus oryzae for 10 days, or
  - 200-250 g NaHCO3.

These additives contribute to the improve of rumen conditions and enhancement of feed consumption.

- Concentrate in the ration should be increased gradually.
- Rumen undegradable protein or protected amino acids can be used.
- The animal can be orally supplied with 250-300 g propylene glycol daily for several days.
- Oral use of 12g/day niacin for 1-2 weeks or 6g/day niacin from 2-4 weeks before calving to 90-120 days of lactation can be recommended.
- Parenteral use of 1-6 mg vitamin B_{12} can be considered.
- A body condition score above 4 should be avoided in heifers and dry cows.
- Abrupt feed changes should be avoided.
- Good quality roughages should be used.
- To adapt to the postpartum ration, concentrate should be used 1% of the live weight in the 3-week period before calving.

A specialist veterinarian should be consulted for treatment if a ketosis incident is discovered.

Retained Placenta

Retained placenta after the birth may appear normal for dairy cattle. However, its normal prevalence in the herd is about 8-10%. One should be careful in cases exceeding this rate. Under normal conditions, cows discard the placenta within 12 hours after calving. Factors such as imbalances of Ca, P, Se, vitamin A, D and E, excessive condition increase the risk of retained placenta.

Retained placenta and metritis lead to reproductive problems as they delay involution of uterus. Delayed pregnancy in dairy cattle farms and associated loss in the milk yield bring about considerable economic losses (Kayoka et al., 2002). This is because the number of animals in unproductive period rises in the herd and treatment cost is high as well.

Preventive measures can be listed as follows:

- Rations should be balanced particularly in terms of Ca, P, Se and Vitamin A, D and E in the last 2-4 weeks of pregnancy. Intake of 135,000-150,000 IU vitamin A, 15,000-25,000 IU vitamin D and 2000 IU vitamin E by dry cows daily can make a contribution.
- Low or high intake of Ca in the dry period may induce retained placenta.
- Selenium and vitamin E intake in the dry period decreases the risk of retained placenta. Use of vitamin A and vitamin E is recommended as an alternative measure.
- If feed consumption is problematic, then the animal should be supplied with Ca. 75 g $CaCO_3$ intake makes a significant contribution because Ca is important in terms of protecting the muscle tones and tonus of the uterus wall.
- If milk fever is a serious problem in the herd, anionic rations are recommended. Therefore, S, Cl, K and Na levels in the ration should be checked. Ca level in the blood falls below 9 mg/dL in milk fever.
- High condition should be avoided before, during and after calving. Overconditioning may increase risk of retained placenta.
- Stress during calving and after calving should be eliminated.

Repeat breeding

Feeding conditions causing the animals to be too fat or too thin may lead to some problems relating to reproductive performance. Cows with high condition mostly suffer from postpartum problems such as retained placenta, metritis and cystic ovaries. Cows with low condition are more prone to insemination/breeding and pregnancy problems due to the failure of uterus, ovary and follicles to prepare for a new oestrus and ovulation. As is known, cows should be impregnated within 60-90 days after calving, which is the most problematic period in terms of energy balance. Severe negative energy balance may decreases LH secretion and delays the first oestrus, first ovulation and prolongs service period, leading to an increased calving interval.

To avoid reproductive problems,

- Cows should not be reduced below a BCS of 2.5 in the peak period and should be dried off at BCS of 3.5.
- Vitamin A, D, E and Se supplementation before and after calving may have significant contributions. This measure also helps in coping with problems such as metritis, cystic ovaries and mastitis.
- Overuse of roughages containing oestrogen should be avoided.
- Mouldy and aflatoxin-containing feeds should not be used.
- Proteins highly degradable in rumen escalate the ammonia and urea level in the uterus fluid and may lead to embryo losses. Therefore, the balance of energy-protein, rumen degradable protein and undegradable protein in the ration should be well-balanced.

7.3.2 Disease due to Low Cellulose Intake

Acidosis

It is a disorder that appears in consequence of the intake of excessive amounts of rumen fermentable carbohydrate. Appearance of clinical symptoms varies depending on the amount and type of carbohydrate taken in. Rumen pH falls below 5.5-6 as a result of loading the rumen with excessive amounts of carbohydrate. Lower pH values are impossible for both rumen microorganisms and the animal to cope with physiologically. Rumen pH affects the type of the microbial population, leading to the predominance of lactic acid bacteria in the microbial population.

Acidosis mostly emerges within the first month after calving in cows. Feeding them with high amounts of concentrate (concentrate feed ratio in the ration over 55-60%) to fulfill their energy requirement is a significant factor. Furthermore, if cows receive roughage and concentrate separately, high yielding cows have to consume 5-6 kg concentrate in a meal, which in turn causes the rumen conditions to be more acidic as well as fluctuations in feed consumption.

In acute acidosis, rumen pH falls below 5. Lactic acid and volatile fatty acids rise significantly and the number of protozoans falls almost to zero in the rumen. Such type of acidosis is known as **rumen acidosis.** In severe cases, physiological functions may be disrupted and death is possible. With the acidosis developing in the rumen, blood pH falls below normal (7.44) values as well (7.20). Increased lactic acid in the rumen causes a significant amount of lactic acid to flow into the blood circulation. This is called **systemic acidosis.**

When rumen pH falls to 5, hydrogen receptors step in and initiate secretin secretion, which causes the forestomach movements to slow down. Forestomach movements diminish and may even completely stop in acidosis. In such acidotic ruminants, rumen content is hypertonic compared to body fluids.

Bicarbonate buffer system plays an important role in buffering the systemic acidosis and ensures the pH of body fluids to be kept within normal limits. Slowdown in rumen movements reduces the rapid degradation of rumen content and contact of the final products to be absorbed from rumen walls, leading to decreased absorption of organic acids.

In acute acidosis, blood flow into the digestive system diminishes, which in turn decreases the absorption of organic acids from the rumen. However, if rumen epithelia are exposed to high acid concentration for a long time, this may give rise to hyperkeratosis and parakeratosis on the rumen walls, which is another factor reducing the absorption capability of rumen walls. These effects further decrease the rumen pH. Although all organic acids significantly increase in acidosis, the major influential and strong one is lactic acid (Styler, 1975; Gorgulu, 2007).

The most important lactic acid-producing bacteria in the rumen are Streptococcus bovis. Fall of rumen pH to 5.3-5.5 reduces the amount of S. bovis. Lactate-utilizing bacteria (such as

Megasphera elsdenii) also exist in the rumen. Fall of rumen pH from 6 to 5.5 diminishes the lactate-utilizing bacteria as well. However, maintaining a rumen pH of 5.5-6 prevents lactic acid accumulation in the rumen as it keeps in balance the lactic acid-producing and lactic acid-utilizing bacteria in the rumen.

Subclinical acidosis is generally confused with other problems related to low quality roughage nutrition or feed bunk management. So, it may lead to considerable economic losses. The most prominent symptom of subclinical acidosis is decreased and irregular feed consumption. Other signs are decreased milk yield and milk fat, low condition despite proper energy intake, high culling ratio, unexplained diarrhea, bloat and laminitis.

The following measures can be implemented to reduce the risk of acidosis:

- Concentrate ratio in the ration should not be increased above 50-55%.
- If the concentrate ratio in the ration is to be increased above 50-55%, particle size of the roughage should be adjusted precisely and 1-2 kg hay should be supplied daily. If TMR is given, particle size of the roughage should not be lowered below 1.5-2 cm.
- If corn silage is being used in the ration, concentrate ratio should be well-arranged. Grain content of corn silage is high and its particle size is small. These may increase the risk of acidosis.
- Under conditions where concentrate is given separately, more than 2-3 kg concentrate per meal should not be given. Feeding the animals with small but frequent portions of concentrate contributes to maintaining a more stable rumen pH.
- In the case that starch sources highly degradable in rumen such as barley and wheat, the reduction of the concentrate ratio in the ration or using them together with starch sources resistant to ruminal degradation such as corn and sorghum may assist in preventing the rapid change of the rumen pH. Wheat ratio in compound feeds should not exceed 30-35%.
- Among feeding systems, total mixed ration should be preferred. In total mixed ration, roughage and concentrate feed is consumed together so that rumination is stimulated and the rumen pH becomes more stable compared to other feeding systems.
- Some other measures that may contribute to maintaining a stable rumen pH can be taken into account. They are: a) use of buffer substances, b) use of probiotics.

Bloat

Bloat is the loss of normal functions of the rumen due to gas accumulation. Bloat arises out of mistakes made in the management of feeding, nature of the feed, animal itself and microbial factors. Normally, the gases in the rumen are produced by rumen microorganisms at a level of 2 L/min in normally fed animals and below 0.2 L/min in animals having very low feed consumption. These gases are normally eliminated by eructation or belching. With

a series of contraction activities in the forestomach complex, free gases in the rumen are expelled through the oesophagus. Bloat may occur when this routine function disrupted due to any reason. When gases start to accumulate in the rumen, the distending rumen applies pressure to the diaphragm, heart and lungs, and depresses the respiration. It may cause death eventually (Stone, 2004). There are two type of bloat:

- Free gas bloat
- Frothy bloat

Causes of free gas bloat can be listed as follows:

- Blockage of the oesophagus and thus of the gas outlet due to feeds that may block the oesophagus such as potato, apple and turnip,
- Slowdown of forestomach movements due to damaged vagus nerve in consequence of severe pneumonia or entrance of a foreign substance into the reticulum,
- Prevention of the gas discharge because of the deformation and compression of the oesophagus due to oedemas and inflammation in the rib cage and abdominal area,
- Slowdown in the movements of the rumen due to severe acidosis (excessive concentrate consumption),
- Decreased intensity of contractions of the rumen walls due to deficiency of Ca (hypocalcaemia) which plays an important role in muscular contractions.

This type of bloat can be eliminated by resolving the blockage in the oesophagus or taking out the gas in the rumen through the use of a gastric tube or trocar. In severe bloat cases, however, gas discharge reflex of the animal may be damaged permanently. Such animals constantly suffer from bloat. They should be culled.

Bloat cases are mostly seen in fattening animal. Its major cause is rapid transition to fattening ration without any adaptation. Free gas bloat emerges very rapidly and may cause death. That is why it is known better than frothy bloat. However, 90% of bloat cases in fattening and dairy cattle farms but particularly in fattening cattle farms are frothy bloat cases.

Under normal conditions, gases generated in the rumen cause the gas discharge reflex to step in when the pressure inside the rumen reaches a certain level. However, foam produced in the rumen traps and hampers the gas discharge, leading to frothy bloat.

Foam produced in the rumen stems from two sources. One of the factors is cytoplasmic proteins in green fodder causing foam generation in the rumen. Second are microorganisms producing foam when animal consumed high amount of concentrate. Considering these factors, distension cases can be divided into subgroups, namely, pasture bloat and frothy bloat. It is not possible to completely expel the gas through the use of a gastric tube or rumen trocar as the gas is trapped in the foam. Antifoaming agents can be recommended for such cases.

Bloat cases may emerge under conditions where concentrate is used with a ratio over 50%. Such bloat cases are called “feedlot or grain bloat” relating to acidosis. In frothy bloat,

bacterial mucopolysaccharides and some unidentified macromolecules are generated during the intense destruction of microbial cells in the rumen. These factors are reported to have an influence on foam generation in the rumen.

Microorganisms (e.g. Streptecocus bovis and Lactobacillus spp.) are dominant in the rumen when animal fed with diet containing highly fermentable carbohydrates. Abundance of available energy in the rumen and accumulation of rapidly produced fermentation acids and bacterial mucopolysaccharides can increase viscosity in the rumen and disrupt normal rumen function and promote formation of stable foam indicative of frothy bloat.

Measures for preventing bloat can be listed as follows:

- Antifoaming agents: Some antifoaming materials are commercially available to prevent particularly green fodder bloat. They are not very effective for frothy bloat.
- Addition of salt into rations containing high concentrate up to a ratio of 4% reduces feed consumption and increases rumen passage rate, leading to decreased bloat cases.
- Addition of mineral fat into the ration up to a ratio of 4-8% reduces bloat cases in animals fed with high concentrate feed.
- Use of yeast culture in the ration increases the number of lactate-using bacteria in the rumen. Therefore, the use of yeast may reduce acidosis and bloat cases that are likely to emerge with acidosis.

The use of salt and mineral fat in the ration causes exacerbation of performance. Hence, such applications are more effective when used for treatment purposes.

Laminitis (Foot problems-founder)

Laminitis is the inflammation of the laminae of the hoof. However, laminitis cases generally develop with acidosis. Impacts of the rumen pH on the pathogens of the rumen, liver and digestive system cause cows to be more vulnerable to laminitis. Apart from the acidosis developing with the excessive consumption of carbohydrates, other factors are also influential on laminitis, such as physiological and hormonal changes developing with calving and lactation, diseases like metritis, concrete floor and insufficient bedding (Shaver, 2005).

Firstly, metabolic changes emerging with acidosis play an important role in the development of laminitis. Histamine level in the rumen fluid increases as well when the acidosis developed in the rumen and digestive system. As is known, histamine gives rise to dilatation of the blood vessels and rise of the blood pressure. The rise of the blood pressure leads to leakages from the walls of the blood vessels, damage of blood vessels as well as local bleedings and development of oedemas. Among the causes of oedemas observed on the hooves, increased histamine concentration in the rumen under conditions of developing acidosis is regarded as the most important factor. Other factors reported to have influence on the increase of predisposition to laminitis due to acidosis are the damage of blood vessels from decreased pH of blood and reduced amount of sulphurous amino acids reaching the

hooves. Insufficiency of sulphur containing amino acids in the hooves for keratin formation has influence on the increase of laminitis cases.

With the acidosis developing in the rumen, lactic acid bacteria gain predominance in the rumen. Several lactic acid bacteria have ability histidine decarboxylation and transform it to histamine. However, when histamine enters the circulation, it is methylated and transformed into inactive forms in the liver.

Histamine taken in orally does not lead to laminitis because histamine is metabolized by the digestive system mucosa and microorganisms. Histamine level in the serum increases in chronic laminitis. Hepatic abscess developed with acidosis and hyperkeratosis may promote secretion of histamine. Histamine secretion rises under conditions of stress and diseases causing tissue injuries.

Same measure to prevent acidosis can apply to laminitis as well. Factors precluding the fall of pH and providing stable conditions in the rumen inhibit the emergence of laminitis.

Protein has a special role in laminitis. Laminitis is more frequent in animals fed with rations containing a high ratio of rumen degradable proteins. Nevertheless, the impact of protein on the emergence of laminitis has not been clarified completely. This impact is rather attributed to allergic/histaminic effects of proteins as well as specific effects of the end products of protein degradation. As mentioned above, histidine is able to transform into histamine through decarboxylation.

Displaced Abomasum

Displaced abomasum occurs in cows within two weeks after calving. In 80-90% of displaced abomasum cases, abomasum moves to left and upward, whereas in other cases it is observed on the upper right. Therefore, it is possible to mention them as left displaced abomasum and right displaced abomasum.

The most important factor leading to displaced abomasum is the increased abdominal area for the free movement of stomach compartments, which is created by the released foetus and foetal membranes after calving. Feeding with high concentrate and roughages with small particle size particularly in the dry period is another important factor.

Animals suffering from displaced abomasum exhibit symptoms such as ketosis, feed consumption with longer interval, ceased feed consumption, insufficient intestinal activity, decreased milk yield listlessness and general discomfort. Gas accumulation in the rumen may restrict nutrient flow lower part of gastro intestinal system.. Its frequency in dairy cattle herds is about 2-4%.

The risk of displaced abomasum after calving is high for cows that have a high body condition and are fed with high concentrate and roughages with small particles. Feed consumption of cows with high condition after calving is low. Since this reduced appetite restricts roughage intake, this may facilitate rumen depletion in abdominal area. In addition, hypocalcaemia may diminish muscle tonus, leading to higher susceptibility to displaced abomasum.

To prevent the displaced abomasum,

- It should be avoided to feed the animals with high concentrate and low roughage rations in the dry period.
- Alkalosis developing due to excessive intake of minerals and proteins should be avoided.
- Toxaemia and Ca-related problems should be avoided. Factors inducing milk fever induce displaced abomasum as well. Tonus of the rumen wall muscle diminishes in the milk fever as well.
- Cows should receive high quality and long-particle sized roughages equaling to 1.5-2% of their live weight in the first weeks of the dry period. Roughage consumption may be reduced to 1-1.5% of their live weight in the period 3 weeks before calving. Supplying roughage after calving may reduce the risk. It may be recommended that concentrate consumption can be kept at 1% of the live weight in the late dry period.
- Practices and factors restricting the feed and particularly roughage consumption of cows in the dry period and after calving should be avoided.

A specialist veterinarian should be immediately consulted for treatment of displaced abomasum.

Low level of milk fat (Low fat test)

Another problem emerging with acidosis is the reduced level of milk fat. With acidosis, cellulose digestion diminishes in the rumen. As the rations inducing acidosis are predominantly based on concentrate feed, rumen fermentation occurs in favor of propionic acid. Thus, deficiency of acetic acid, which is the most important source of the de novo synthesis of milk fatty acids, plays the most important role in the reduction of the milk fat. Particle size of roughages plays an important role in the reduction of the milk fat test as well. Particle size of roughages should not be reduced below 4 cm. As long particles stimulate rumination, it contributes to keeping the rumen pH at a normal range. Moreover, the use of different buffer substances in the ration should be taken into account in terms of preventing the decrease of the milk fat. The use of $NaHCO_3$ in the ration at 0.5-0.75% level may be recommended.

This subject is also discussed in detail in the section dealing with feeding milk composition.

7.3.3 Mineral Metabolism Disorders

Milk Fever (Hypocalcaemia)

Milk fever is generally seen in adult and high yielding cows within 3 days after calving. It may also be observed within 1-2 days before calving or sometimes up to the 7th day after calving. The cause of milk fever is high Ca requirement after calving due to high requirement with lactation

The reasons for the failure to meet the Ca requirement or keep the Ca level in blood at normal level after calving can be listed as high Ca requirement, Ca/P imbalance in the ration, Vitamin D deficiency and insufficient activity of parathyroid gland. 2 litres colostrum contains as much Ca as contained in 40-50 litres blood. Only 70% of the Ca requirement in early lactation is provided from the ration, while the remaining amount is supplied from the mobilization of Ca from bones. That is, Ca absorption from intestines and mobilization of Ca from bones play key roles in the fulfillment of calcium requirement. Ca absorption in the small intestine is dependent on the Ca content, Ca/P ratio and vitamin D content of the ration. The rate of mobilization of calcium from bones depends on the parathyroid hormone production activity of the parathyroid gland. Furthermore, parathyroid hormone also plays an important role for the activation of vitamin D in the body.

Normal blood Ca level	10-12 mg/100ml
Level in calving	8 mg/100ml
Milk fever (mild)	6,5mg//100ml
Milk fever (moderate)	5,5 mg/100ml
Milk fever (severe)	4,5 mg/100ml

Blood P level is low in milk fever. However, blood Mg level is high.

The primary sign of milk fever is appetite loss. Although anal cavity is slackened, defecation is little to none. In the beginning, the cow is excited and staggering; then it loses the ability to stand.

Other problems that may emerge with the milk fever are as follows:

- Increase dystocia due to muscular weakness,
- Increase in uterus prolapse,
- Increase retained placenta risk,
- Increase in Metritis (uterus inflammation),
- Decrease in reproductive performance,
- Increase tendency to bloat due to the decreased muscle tone of the rumen wall (atony),
- Increase displaced abomasum risk,
- increases ketosis risk due to decreased feed consumption,
- Decrease in muscle coordination and strength due to Ca deficiency causes the mammary glands and teat to be damaged and the cow to be susceptible to bacterial infections, leading to increased risk of mastitis,
- Increase risk in other infectious diseases,

- Decrease in milk yield,
- Reduce total productive life in the herd.

To prevent milk fever;

- The cow is not milked completely in the first three days to prevent the withdrawal of a significant amount of Ca from the blood, thus reducing the risk of milk fever.
- Injection of a high dose (10-20 million IU) of vitamin D or its metabolites 3-7 days before the birth may reduce the risk of milk fever by increasing Ca absorption after calving.
- The most significant cause of milk fever is high Ca consumption in the dry period. The use of high amounts of legume forages and inappropriate mineral additives in this period plays an important role.
- In the dry period, a cow weighing, for instance, 600 kg should take in 40-80 g Ca/day, 30-35 g P/day and its Mg, K, Se and vitamin A (maximum 50,000 IU), D (15,000-25,000 IU), E requirements should be fulfilled as well.
- If milk fever is a frequent problem in the herd, daily Ca consumption in the late dry period should be limited to 20-25 g. Thus, high P and low Ca intake activates the parathyroid gland and contributes to ensuring a more expeditious Ca mobilization from bones, thereby reducing the risk of milk fever.
- Intake of 75 g CaCO3 after calving reduces the risk of milk fever.
- In cases where high rumen pH is suspected, 100 g/day ammonium chlorine (or ammonium sulphate) can be added into the concentrate feed for 2 days before and after the calving.
- If milk fever is a frequent problem in the herd, using with an anionic (<0meq/100g) or acidic ration in the last 3-4 weeks of the dry period contributes to the control and prevention of milk fever. Anions (S, Cl) are more than cations (Na, K) in anionic rations. In cows fed with such rations, a mild acidosis occurs and Ca mobilization from bones is better. In fact, this is also associated with the increased capacity of blood to carry Ca.

Grass Tetany (Hypomagnesaemia)

From time to time, numerous milk cows may die of grass tetany emerging due to low Mg level in the blood and extravascular fluid. Grass tetany is mostly observed in milk cows grazing on fresh meadows. Such meadows contain high K and low Mg. This is because the fertilizer applied has high K and N content.

Application of fertilizer containing high K and N restricts the Mg intake of the plant from the soil and makes it insufficient in terms of Mg. Additionally; the high K content diminishes Mg absorption from the digestive system. Grass tetany emerges even if the Mg reserves in the body are not depleted.

Symptoms of grass tetany are extreme sensitivity, irritation, fatigue, involuntary muscular movement, grinding of teeth and excessive froth production. Appetite loss, increased blood flow, excitement and ossification in soft tissues were observed in an experimental hypomagnesaemia detected in calves.

Under conditions suitable for the grass tetany to appear, several measures can be taken, such as fertilizing the meadow with Mg-containing preparations, implementing a transition period for the animals to be fed in the fresh meadow and supplementing the rations of the animals with a mineral mixture balanced in terms of Ca, P, Mg, K, Cu and salt.

To prevent grass tetany,

- Tetanic cases can be prevented by feeding the animals with 60g/day preparations containing at least 87% MgO in problematic periods.
- Sometimes it is necessary to raise the dose up to 120 g. However, a dose of 180 g causes diarrhea.
- Use of magnesium phosphate at a dose of 53 g/day is also effective.
- Fertilization of meadows with Mg-containing fertilizers increases the Mg content of grasses.
- In order to enhance the Mg content of meadow grasses, a 2% MgSO4 solution can be sprayed onto the meadow once in 2 weeks, or 30 kg/ha powdered MgO can be applied onto the meadow before the animals are pastured.
- If MgO ratio reaches 2-4% in the ration, it is toxic for calves.

7.3.4 Other disorders

Udder oedema

Most of the udder oedemas arise out of abrupt fall of blood proteins in the period just before calving. Transfer of gamma globulins to the colostrum plays the key role in this fall. This is more frequently observed in cows giving birth to their first calf. Udder oedemas manifest themselves with the fluid accumulation between the secretive cells in the udder. The source of this fluid is the proteins leaking from blood vessels. Udder oedema is generally observed under the skin on the front part of the udder. Touching the udder hurts the cow with an oedema on its udder and brings about problems in milking. Teats get shorter and the cow shows unwillingness to enter the milking stall.

The real cause of udder oedema is not known. However, high sodium and potassium consumption is known to increase the risk of udder oedema. Other factors can be listed as insufficiency of protein and other nutrients, feeding with high amounts of concentrate before calving, insufficient blood and lymph flow and anaemia.

Salt consumption should be restricted in the dry period in an attempt to prevent oedema. More attention should be paid particularly to heifers whose births are coming closer.

For treatment, massage should be given from the bottom to the top of the udder twice a day for 10-20 minutes after milking. This will accelerate the blood flow to the udder.

7.4 Feeding Systems and Mistakes

As feed costs have a high share among operating costs of a dairy cattle farm, it is aimed to maximize the profit over the feed costs. However, housing system, type and presence of roughages and genetic capacity of animals play an important role profitability of dairy farm. Furthermore, the feeding of animals and particularly the selection of proper feeding system are of great importance in terms of achieving this goal (Tolkamp and Ketelaars, 1992). The most effective way of increasing the revenue in dairy cattle farms is to minimize feed costs (main cost) because other costs are fixed costs. Fixed costs are composed of building, tools and equipment, labor and some other costs. In the general sense, the factors influencing profitability in dairy farms can be listed as milk yield, live weight gain, fertility and diseases (Tamminga & Hof, 2000).

Lactation curve and the periods in which the body fats are stored and mobilized should be taken into account in the selection of proper feeding systems and optimum ration formulation for highly productive dairy cattle. Feeding systems applied in practice according to housing condition and available facilities in of dairy farm are given below.

- Standard feeding
- Strategic feeding
- Feeding complete diet (Total Mixed Ration , TMR)
- Strategic total mixed ration feeding

7.4.1 Standard feeding (Feeding according to milk yield)

It is a feeding system involving the feeding of dairy cattle depending on their current live weight and milk yield. All feeds are given separately, in a limited and individually for all animals in this system. However, such a feeding system requires some certain conditions: Milk should be regularly controlled, the feeds should be given separately and individually, and the quality and quantity of each feed consumed by the animals should be known. Furthermore, the high yielding cow should have passed the early stage of lactation, which her feed intake cannot meet, her requirements. (Ketelaars & Tolkamp, 1992).

In the implementation of this system, a basal ration consisting of roughages is formed to meet the needs for maintenance and milk yield. The system can be simplified and made practical by feeding the animals with concentrate according to their productivity above basal condition.

Advantages of standard feeding:

- It can be easily implemented in small dairy cattle farms with few cows.
- Cow can be individually fed with roughages and concentrate, and it is possible to feed cows a balanced diet.

Disadvantages of standard feeding:

- It entails strictly regular milk control.
- Individual feeding of the cattle in large enterprises is difficult and requires high investment and labor.
- It requires sensitivity in preparing the rations and managing the herd.
- Rumen conditions may be disrupted if the roughages and concentrate are not mixed properly and high amounts of concentrate is given separately. Studies indicate that only 45% of farmers employing this system are able to use a balanced ration.

7.4.2 Strategic feeding

In this feeding system, roughages are given freely, whereas concentrate is given individually and in a limited manner regardless of the milk yield. Concentrate feed is either given at the same quantity on a continuous basis until the end of lactation or the quantity is reduced during the second half of lactation.

Advantages of strategic feeding:

- Precision in feed bunk management and diet formulation can be slightly lower than that in the standard feeding. Nevertheless, attention should be paid to determining the required concentrate.
- Productivity can be increased slightly relative to standard feeding by providing a more frequent and smaller portion feed with the additional concentrate. Studies indicate that milk yield can be increased by 4% in this way. Combination of strategic feeding with computerized automatic feeders provides great advantages in terms of preventing the undesired circumstances stemming from the additional concentrate. In this system, it is possible to identify the animals and their meal size and meal number.
- Compared to TMR, it is possible to reduce the total feed cost some more through a proper management.
- As roughages are given freely, may compensate mistake in deciding amount of concentrate.

Disadvantages of strategic feeding:

- It requires high amounts of investment for feeding manipulations particularly in barns that have tie stalls.
- It requires more management knowledge and labor skills than TMR feeding.
- Reductions to be made in the amount of the concentrate to be given additionally in the next phases of lactation may result in a faster drop in the milk yield compared to TMR.

7.4.3 Feeding complete diet (Total Mixed Ration, TMR)

The main objective of a feeding program in a dairy cattle farm is to meet the nutrient requirements of the livestock in a proper and balanced fashion. Appropriate feeding systems should be selected in order to implement a proper and balanced feeding.

In dairy cattle farming, there are different feeding systems such as standard (rational) feeding, strategic feeding, total mixed ration feeding and strategic total mixed ration feeding. Among these systems, the most applicable one in terms of milk yield, fertility and costs is the total mixed ration feeding. It can be defined as the feeding system in which all roughages and concentrate feeds in the ration prepared in line with the requirements of the cattle are mixed and given ad libitum. The use of TMR feeding system can provide some advantages for the enterprise.

Advantages of total mixed ration feeding:

- It eliminates the risk of sorting of feeds by the cows.
- It ensures more stable rumen conditions.
- It allows the preparation of the ration with the least cost formulation.
- It allows the use of less palatable feeds in the mixture.
- TMR feeding system improves feed consumption and feed conversion.
- It reduces the labor need for feeding.
- It affects the cow health positively and contributes to the profitability of the enterprise.

Disadvantages of total mixed ration feeding:

- Cows should be grouped.
- It entails the use of special equipment.
- The first investment cost is high.

In order to attain the desired result from the implementation of TMR feeding, some herd management practices should be dealt with in common.

Considerations for TMR formulation:

- If a wrong TMR formulation is performed, the cattle cannot meet their needs.
- TMR mixture can produce the desired result only if each feed material has the desired qualities.
- Ration calculation should be made separately for each group, taking into account the average productivity level, body size and milk analysis results.
- Dry matter consumption should be estimated accurately while formulating the TMR.
- Considering 5% lower dry matter intake than the estimated feed consumption may improve milk production.

- Keeping the energy content of the ration, farm where feed bunk management is bad may reduce the problems related to low consumption.
- As the use of high quality roughages increases the total nutrient intake, it will produce a better result than expected from the TMR.
- Feed bunk management (e.g. emptiness/fullness of feed bunk, hygiene, and feed bunk space for each animal) is critically important as well.
- TMR formulation should be performed, considering that more nutrients will be needed by highly productive cows to regain the lost body conditions and by cows in the first and second lactation to reach their adult live weight (growth).
- Feeding level should be calculated allowing a 5% refused feed. If the feed consumption behavior of cows is normal and the remaining feeds in the feed bunk resemble to the total mixed ration mixture, then it is better that a small amount of feed remains in the feed bunk.
- Roughages used in the ration formulation should be analyzed at least at monthly intervals.
- In the cases that the quality of the roughage varies, the roughage should be analyzed and the formulation of the ration should be rearranged according to the result of the analysis.

Management of the Mixer Wagon

- In enterprises applying the TMR feeding, the above-mentioned advantages can cover the cost of TMR wagons in 1.5-2 years.
- The mixer should be filled up to 60-70% for proper mixing and the TMR dry matter should not be lowered below 50%. Each animal can be fed with up to 35-45 kg/day TMR mixture.
- The duration of mixing the feeds in the mixer wagon should be 3-6 minutes.
- Wagon scale should be checked regularly (each week) in order to be sure about the accuracy of the amounts of feeds put into the mixer.
- Particle size of roughages in the ration is very important; mixer wagons that are capable of adjust the particle size with their proper blades are commercially available in the market.
- Increasing the number of meals (3-4) may encourage the livestock to consume more feed.
- The TMR given to the livestock should be 5-10% more than they are able to consume.
- If the remaining feeds will be given to the heifers and other cattle that are being fattened, the analysis of these feeds and taking into account the results of the analysis while formulating a new TMR for them produce more successful and accurate results.

- If the TMR contains water-rich feeds such as silage and pulp, consumption of the feed by the livestock is better compared to that of dry fodders.

Grouping in the Herd

- While changing group, not only the milk yield but also the condition score, age and reproduction status should be taken into account.
- Shifting groups should be performed periodically (once a month).
- Cows changing group should be placed into the groups on the same day and they should be fed with a little more feed on the moving day.
- Higher drop in milk yield is observed in late lactation cows to be placed into a new group compared to early lactation cows.
- Group shift should be carried out at hours when the animals' activity is minor (night) in an attempt to reduce the stress that may occur during grouping.
- Milk yield difference between the cows in the same group should not exceed 10 kg.
- Accepting that the highest milk yield is obtained from TMR formulation while taking the average milk yield of the groups provides advantages by assisting in the early lactation cows with high milk yield to meet the needs better and the late lactation cows to regain their lost conditions.
- Most of the medium-sized farms keep their cows in 3 different groups, 2 of which are lactating cows and 1 of which is dry cows group. Therefore, 3 different TMRs should be prepared so as to meet the needs of the 3 groups.
- While formulating the TMR, milk yield of the group should be inflated by 30% if one-group feeding is being carried out, whereas average milk yield should be inflated by 20% if two-group feeding is being carried out and by 10% if three-group feeding is being performed.
- Cows in early lactation period are capable of adapting to feed changes compared to cows in middle or late lactation.
- Nutrient composition of the TMR in different groups should not be changed more than 15-20% in order to avoid digestive problems and decrease in milk yield.
- Keeping the highly productive cows in the first and second lactation at the high feeding level is of great importance in the sense that both the milk yield will drop slowly and young animals will have a better growth and aged ones will regain the lost condition.
- If TMR was well-formulated in terms of fiber and energy content and cows were fed properly in the transition period, fresh cows can be placed in the high TMR group.

Body condition of cows fed with TMR

- In dairy cattle farms, cows should calve with a body condition score of 3.5-4.0
- Cows included in the group with the body condition score of 3.5-4.0 suffer less problems after calving.

- Cows in early lactation should not lose more condition than 1 point.
- A condition loss of 1 point in early lactation period means approximately 1 kg loss of live weight daily. No more weight than 50-60 kg should be lost in the early lactation.
- 1 kg loss of live weight equals to approximately 6-7 kg milk.
- If cows in the late lactation are fed sufficiently, they gain condition more effectively than dry cows and become less susceptible to fatty liver and other metabolic problems compared to those gaining condition in the dry period.
- If the body condition of the dry cows is not at the desired level (3.5-3.75), then additional feeding should be performed.
- Keeping dry cows in two different groups for this reason may offer a solution in large dairy farms.

Implementation of TMR minimizes the milk fat drop and risk of acidosis by ensuring more stable rumen conditions by virtue of containing roughages and concentrate together, while allowing the peak milk yield to be higher and drop in the post-peak milk yield to be slower by maximizing the nutrient intake due to ad libitum feeding, and ensuring a higher profitability by reducing the metabolic and reproductive problems.

7.4.4 Strategic Total Mixed Ration Feeding

It is difficult to meet the nutrient requirements of high yielding cows in TMR feeding applications (Vander Haoning & Alderman, 1988). In addition to TMR feeding application, assigning of this system with automatic feeder can cover up this deficiency of the TMR system. Highly productive cows can consume the additional concentrate feed they need from automatic feeders. Restriction of the amount of concentrate feed to be given at a time in the automatic feeder systems is important in terms of preventing possible digestive system disorders.

Advantages of strategic TMR feeding

- Combination of the TMR system with automatic feeders may allow very highly productive cows to be nourished better.
- It possesses the advantages of the TMR system.

7.4.5 Feeding Errors

Limited feeding

In dairy cattle farming, the livestock should be fed freely if it is not possible to feed them individually and separately. If limited feed is given when it is not possible to perform individual and separate feeding, dominant animals in the herd hierarchy consume more feed than they need in the first meal and may possibly suffer from acidosis, bloat or diarrhea. As these animals do not consume any feed in the next meal, hungry animals, which lost their shares in the previous meal, consume more feed than they have to in one meal and may be exposed to the same problems. In such cases, variations in feed consumption and milk

yield are continuously observed in the herd, and they cannot maintain their productivity and condition when they have diarrhea.

Insufficient feed bunk space

60-70 cm feeding space should be allocated to each animal in dairy farm. Even if free feeding is being carried out, all animals should be on feed during feeding. If some animals are unable to access to feed bunk, then they have to consume the sorted feeds. In practice, it is possible to mention 3 different rations: First one is the ration prepared by nutritionist and given to the person mixing the TMR in the mixer wagon; second one is the ration prepared by mixer wagon operators and third one is the ration consumed by the animal. Errors made at these stages may lead to significant differences between the planned and consumed rations. Thus, expected performances may not be achieved, and fluctuations may be observed in the milk yield of particularly highly productive animals.

Mixing home grown or purchased ingredients to commercial compound feeds

Addition of bran, protein rich feeds and cereals into commercial compound such as fattening feeds, heifer feeds and dry period feeds while formulating a daily ration disrupts the balances of the mixed feed and ration severely. **Addition of cereals into the mixed feed** may not alter the energy of the feed or may increase its energy as the energy of cereals is high, but generally decreases the protein level and dilutes the vitamin and mineral level to the extent they are added into the mixture. The most important problem here is the restriction of vitamin and mineral intake of the animals. Besides, Ca/P balance of the ration is distorted as cereals are rich in terms of P and poor in terms of Ca.

Addition of bran into the mixed feed reduces the energy of the ration as bran has low energy and high P content. It distorts the Ca/P ratio and dilutes the vitamin and mineral level of the ration to the extent of the amount added into the mixture.

Addition of protein rich feed into the mixed feed disrupts the energy-protein balance of the ration and increases the level of protein. Considering that mixed feeds produced in Turkey are protein-based, it leads to redundant and excessive protein intake. This is both financial loss and leads to environmental pollution by the discharge of excessive protein as urea in urine. Excessive protein intake increases the urea level of the blood and uterus fluid and milk and may increase the number of early embryo losses.

Addition of feed ingredients into the commercial feed disrupts the macronutrient balances. The primary problem is, however, the significant decrease of the vitamin/mineral intake by the animals on the grounds that farmers reduce the amount of the mixed feed and use other feeds. This gives rise to problems arising out of vitamin and mineral deficiencies. Additives manufactured for farms and used per animal are generally used in small enterprises. In large enterprises, however, it is not clear whether they are able to be properly mixed in the TMR mixer.

7.5 Grouping Dairy Cows

Large dairy farms have to consider their own structure, divide their cows into certain groups and operate accordingly. Studies indicated that grouping young heifer before puberty faced less stress than those grouping after puberty. Furthermore, a cow may changes 3-5 groups during one lactation period depending on the size of the herd. This exhibits importance of grouping of cows in large dairy herd. Although most of the conflicts (80%) occurring after a new grouping last for 1 minute, they can last up to 1 hour.

Grouping strategy is an important component of an efficient feeding and reproductive program regardless of feeding system. Setting uniform groups ensures that the requirements of the cattle are determined soundly and they are fed more precise (Grant and Albright, 2001). As rations are calculated based on the group averages, low productive cows of the groups are over-fed, while highly productive ones are fed insufficiently. The more homogenous the groups, the less of a gap exists between the highest cows and the lowest cow and nutrient specifications for that group will more closely meet the requirements of the majority of cows. Furthermore, cattle are herd animals and intrinsically need to live in groups, and that their natural behavior characteristics should be taken into account in setting the groups. Generally farmers use age, gender (calf, heifer, bull, cow, etc.), physiological condition (lactation, dry) and milk yield (low productive, highly productive) as criteria for grouping (St-Pierre and Thraen, 1999; Sniffen et al., 1993).

Feeding systems are generally based on the calculations made using the average yield of the herd. So, low productive cows are exposed to high nutrient intake and highly productive cows are exposed to low nutrient intake, which escalates the level of problems in the herd. Highly productive cows need more dry matter and thus more daily nutrient intake. It is possible to solve the problem with effective grouping strategy.

Principles of grouping the cows

First, dairy farm should have a sufficient infrastructure for grouping the cows. Operation plan designed in the establishment phase of dairy farm is a restrictive factor for grouping. If group number was not taken into account in initial operation plan of dairy farm, additional investment and cost may be avoided.

Factors affecting group size;

- Milking parlor capacity,
- Condition of gates and corridors,
- Average age of the herd,
- Average days on milk of the herd,
- Size of cows,
- Reproductive status,
- Number of cattle in different physiological periods,
- Condition of equipment for preparing and distributing the rations with different contents (Anonymous, 2010).

Factors required to be primarily taken into account vary from farm to farm. Some farmers take the milk yield as basis, whereas some take the body condition score and some attach priority to reproductive condition to arrange the groups. There are also 2 different cases in terms of lactation milk yield; one group takes into account the milk yields in the previous lactation, while the other group of farmers chooses to monitor the daily changes.

High yielding cows are not inseminated in the first days of lactation. Therefore, it is necessary to keep fresh cows and high yielding cows together for improve milk yield of fresh cow and effective oestrus control and artificial insemination. However, not all cows yield similar level of milk in this period; so, it would be more rational to group them according to their nutrient requirements (crude protein, starch, sugar, cellulose, fat, vitamins, minerals, etc.) which are directly associated with the milk yield.

There are different approaches towards the grouping of cows. The most common one is the grouping according to lactation period. However, the cows that are in the same lactation period but have different milk yield levels is a critical decision point here.

Another approach is the grouping of cows according to their milk yield. The primary approach here is the assumption that uniformity of the group will be enhanced by virtue of the grouping according to the nutrient requirements of cows in line with their milk yield. In this case, lactation period and monitoring of the oestrus as well as continuous fluctuations in the milk yield appear as restrictive factors.

The other approach may be the grouping of cows by their physiological periods. Although this approach gives advantages for oestrus detection and insemination, milk yield is again a restrictive factor.

Studies indicated that it is more profitable in terms of feed costs to divide the cows into 3 groups for feeding applications compared to 2-group feeding and that 2 group-feeding is more profitable compared to 1-group feeding. Furthermore, the fact that 3-group feeding emits 15% less nitrogen to the air compared to 1-group feeding is another consideration to be taken into account in terms of minimizing adverse impacts on nature.

It is as important as grouping to prepare appropriate feeding programs for the requirements of the groups. It is highly beneficial to seek assistance from specialists for formulating the TMR ration and check from time to time the calculations, taking into account the occurring changes.

If TMR will be prepared for one group, TMR should be balanced at 30% above actual milk production. If TMR will be prepared for two groups, the average milk yield should be taken 20% higher for calculation. If TMR will be prepared for three groups, TMR should be prepared according to a milk yield 10% higher than the average milk yield (Williams and Oltenacu, 1992). Such approach will assist obtaining a high milk yield in early lactation and preventing the drop in the milk yield in the mid-lactation and late lactation, and regaining the condition lost in early lactation.

Number of groups;

- Minimum 2 and preferably 3 groups can be arranged.
- Dry cows should definitely be separated from lactating cows.
- It may not be appropriate to form 2 or 3 groups in small herds.
- It is recommended for farm using automatic feeders to use it only for highly productive groups.
- Although supplying concentrate the milking parlor facilitate grouping, this practice is not preferable recently as it resulted in fluctuation in rumen pH. If farm condition required separate supply of concentrate, the number of meals should be increased and no more than 3 kg concentrate should be given in one meal.

Homogenizing the groups;

- Milk yield variation in the group should not exceed 10 kg.
- If possible, cows in the first lactation should be kept in the same group because they stay by the feed bunk for a longer time than multiparus cows.
- In large farm there can be management benefit to group open cow together.
- Cows in late lactation with low body condition that have a lower condition can remain in a higher production group to replenish body reserves.
- Nutrient levels in the TMRs formulated for each group should not vary by more than 15%. If the TMR nutrient levels vary by more than 15%, abrupt transitions may lead to digestive disorders.
- Late lactation cows moved between groups to experience a greater drop in milk yield than cows in early lactation

Shifting groups;

Group change means stress for cows. Previous studies reported that the duration of staying by the feed bunk after a group shift is 15 minutes shorter than the duration measured 3 days before the shift. Cow shifting group may be displaced 25 times in the feeding area after changing group, whereas this number was 10 in the previous group of the cow. It is another undesired effect that a group change reduces the duration of lying down of cows from 12 hours to 10 hours. High correlation between the duration of lying down of cows and milk yield reported (Anonymous, 2010). Lying may increase blood flow to udder and supply nutrient for milk synthesis.

Principles for shifting groups:

- Changes should be made in small groups rather than one single cow.
- Group change should be made at night time when the activity at minimum level in the herd to minimize stress.
- Changes should be made after feeding hours, not immediately after feeding.

- Amount of feed should be increased by 5% on the day of group change.
- 60 cm feed bunk space should be supplied each cow.
- It is sufficient to change groups once a month.
- Prior to changing group, factors such as the individual state, condition, lactation period, production level, pregnancy and age of cows should be taken into consideration.

Example groups for large dairy farms:

1. Fresh cows, 0-14 days,
2. Cows yielding more than 30 kg milk,
3. Cows yielding 20-30 kg milk,
4. Cows yielding less than 20 kg milk,
5. Farr off cows (early dry cows),
6. Close up cows (late dry cows)

The above grouping may not be proper for some farms because of milking parlor capacity, paddock numbers, gates and corridors. Therefore, the grouping system given below may be considered as a practical approach.

1. Fresh cows and cows yielding more than 30 kg milk
2. Cows yielding 20-30 kg milk
3. Cows yielding up to 20 kg milk

If the infrastructure and farm conditions are not appropriate, farm having 100-200 milk cows, milk cows can be gathered in two groups, namely, highly productive cows (>25-30 kg) and low productive cows (<20-25 kg).

Grouping is of vital importance in terms of obtaining the expected milk yield from dairy cattle, attaining a more stable change in the milk yield (persistence), controlling, monitoring and improving the reproductive performance in a reliable manner and bringing the cows in different physiological states to an appropriate condition. On the other hand, although dairy cows are herd animals, changes in the herd may result in new struggles and decreased performance as these changes will disrupt the herd hierarchy. Considerations emphasized above should be taken into account with respect to the changes in groups.

7.6 Body Condition Score (BCS)

Body fat reserve of cows is a criterion that can be accepted as the indicator of their milk yield, reproductive performance, feed consumption and health condition. Condition scoring is based on the visual and manual check of certain body parts in order to control fatness of cows, and ranges between 1-5 (Bewley, 2008; Anonymous, 2011). Cows having undesired body condition score (BCS) over the course of lactation may decrease milk yield and reproductive performance, and increase metabolic problems (Treacher et al. 1986).

Mobilization of body reserves is inevitable for milk cows in early lactation. The problem is the abrupt and intense mobilization of fat reserves. Under practical circumstances, fatness of cows can be followed up through the use of body condition score. Body condition score may be regarded as a tool to group dairy cow and evaluate their feeding status and reproductive performance (Wiltbank et al., 2007). Heavy loss of body condition score increases the metabolic disorders and reproductive problems encountered after calving. Butler (2000) reported that the pregnancy rate in cows that have lost condition more than 1 point varies between 17-38%, whereas it varies between 25-53% for cows that have lost condition between 0.5 and 1 point, and is above 60% for cows if the condition lost is below 0.5 point. Likewise, Garnsworthy and Webb (1999) reported that the lowest pregnancy rate is observed in cows that have lost condition more than 1.5 point from birth to insemination. It is acknowledged that 1 condition point is equivalent to approximately 55 kg live weight. Since a loss of more than 1-1.5 point in early lactation is undesired, it can be recommended that the cows should not lose more weight than 50-75 kg. Body condition score is used as a practical means giving feedback concerning the feeding condition of cattle in different periods. Although body condition scoring is a subjective practice based on the assessment of muscle and fat levels, i.e. energy reserves, of the cattle, it is a quite reliable method when used by experienced people (Wright & Russel, 1984; Domecq et al., 1995).

Body condition score in dairy cattle is a subjective assessment based on the scoring of cattle out of 5 points according to the appearances of tail head, hooks, pins, back and ribs (Figure 7.5).

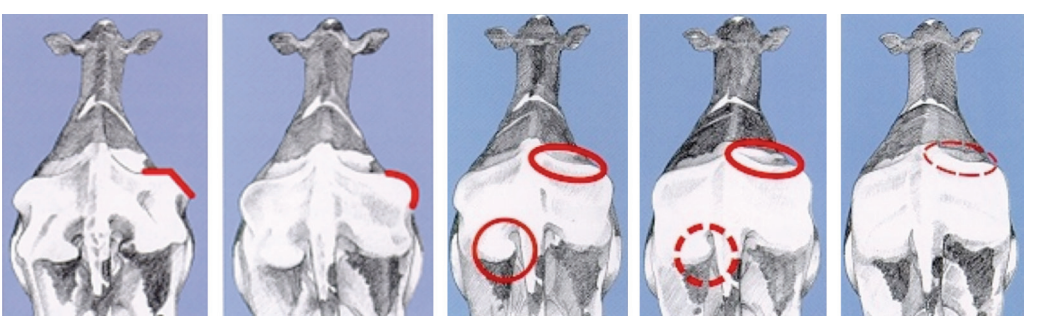

2.75 **3.0** **3.25** **3.50** **4.0**

Figure 7.5 Appearance of cow having different condition score (Anonymous, 2011)

At calving

- The recommended score is 3.5-3.75.
- The aim is to ensure the cow to have a moderate fat reserve on the day of calving.
- A score below 3.5 indicates that the cow did not take in sufficient energy in the late lactation or in the dry period.
- A body condition score above 3.75 indicates that the cow received in excessive energy in the late lactation or in the dry period.

- Cows at this condition should be separated from the milk herd and fed with appropriate amounts of low-energy rations containing adequate proteins, minerals and vitamins.

Early Lactation

- The recommended score is 2.5-3.25.
- The aim is to maximize the consumption of high-energy feeds in order to minimize the body condition changes.
- Attention should be paid to ensure that the body condition score does not fall below 2.5.
- The score may fall below 2.5 in high yielding cows without any problem.
- Cows have good body condition (3.0-3.75), but production is not as high as expected. It should be checked intakes of protein, minerals, or water.

Mid-Lactation

- The recommended score is 3.0
- The aim should be to maintain this body condition in order to maximize the target milk yield.
- A body condition score below 3 indicates that the cow does not receive in adequate energy. In this case, the ration used in the early lactation should be checked.
- In the case that the condition is above 3.5, the energy intake should be limited to avoid overconditioning.

Late Lactation

- The recommended score is 3.0
- The aim is to dry off the cow with a score between 3.25 and 3.75. Therefore, energy reserves of the cow should be regained in this period.
- The cow should not be allowed to gain excessive condition.
- If the condition score of a dried off cow is below 3.5, then it means the cows are receiving inadequate energy. The feeding applied in the early and mid-lactation should be reviewed.
- If the condition score is above 3.75 at drying off, energy intake should be limited in the late lactation.

Dry Period

- The recommended condition score is 3.5- 3.75.
- The aim is to keep the condition within the recommended range.
- Cows should receive low-energy ration that provides adequate, but not excessive, amounts of protein, vitamins, and minerals.

- In the case that the condition is below 3.5 in this period, the energy intake should be increased. Otherwise, milk yield may fall in the following lactation.

Heifers

- The recommended condition score is 3.25-3.5.
- The aim is to keep the condition within the recommended range.
- A condition score below 3 indicates that there is a problem with respect to the feeding of the heifers. If heifers are allowed to become too thin, they will not grow at the proper rate and may have reproductive problems later on.
- A condition above 3.5 may result in the occupation of the mammary glands by fat tissues prior to puberty in heifers. When these heifers freshen, they will not produce to their full ge-netic potential.

7.7 Feeds and Their Characteristics Used in Dairy Ration

Feed is the largest cost (50-70% of the operating costs) in a dairy farm. Therefore, the reduction of feed costs is important. Minimize of feed and/or feeding costs is only possible with the production of necessary feeds within the farm producing plant and animal together. Apart from feed costs, an effective formulation of the total ration balances can promote profitability by increasing the amount and enhancing the quality of the product to be obtained. While preparing a ration, it is essential to know the characteristics and impacts of the feeds in the ration on the nutrition physiology of the livestock as well as the nutrients contained and levels of antinutritional factors. One should know the nutrient levels and characteristics of those nutrients contained in the material used in feeding in order to secure the health and productivity of the livestock and quality of the obtained product.

On the grounds that roughage trade is not widespread in our country and dairy cattle are fed predominantly with roughages, annual planning is necessary for supplying the required roughages. Therefore, roughages should be stored in the form of hay and silage, and annual contracts should be made for the pulps to be purchased throughout the year. If this planning fails, serious problems and unaffordable costs may be encountered in the provision of roughages.

Feeds are generally grouped as roughages, concentrate, and mineral and vitamin additives.

7.7.1 Roughages

Roughages consist of the vegetative parts of legumes and grasses, root and tuber, and industrial wastes, pulp. Their basic characteristic is that they contain more than 18% crude fiber and 30% NDF.

Roughages can be used at a level of 30-100% in the rations in dairy cattle farming according to the productivity and physiological conditions of the cattle. Roughages can

be increased up to 100% in the rations of young females and dry cows. Their percentage in the ration can be lowered up to 30% for highly productive cows and cows in early lactation, depending on the quality of the roughage.

Roughages

Unit volumes of roughages are smaller than those of concentrates. They are low in density and coarse-textured due to cellulose content. Thus, they restrict the feed consumption depending on the stomach capacity. High roughages in the ration restrict the energy intake, thereby reducing the productivity significantly. **However, coarse-textured, cellulose-rich roughages with large particles are of vital importance for increasing rumination, maintaining the rumen pH within physiological limits, digesting cellulose and maintaining the milk fat test in dairy cattle.**

Roughages have low energy due to their high cellulose content. Their NDF content varies between 30-90%. Consumption of roughages is rather related to the NDF content, whereas its energy content is related to the ADF content. Increase of these values reduces both feed consumption and energy content.

Protein level of fodder plants varies significantly depending on the vegetation stage of the plant. Legumes' crude protein content is 15-23%, whereas grasses contain 8-18% crude protein. Crop residues such as straw contain 3-4% crude protein.

Roughage quality is important for dairy cattle farms in terms of establishing ration balances and affecting the need for concentrate predominantly purchased. Table 7.8 demonstrates the impact of roughage quality on the milk yield and concentrate requirement.

Pasture and Forage Crops

Legume and grass cultivated as pasture and forage plants are good sources of protein, vitamin, Ca and other minerals when harvested at proper time. The feeding value of forages is greatly influenced by the growth stage when harvested or grazed. Growth can be divided in three successive stages: 1) Vegetative stage, 2) Flowering stage, 3) Seed formation stage. Usually, the feeding value of forage is the highest during vegetative growth and the lowest during the seed formation stage. Considering the overall nutrient production in the green fodder plants, although their protein content is high, and ADF and NDF contents are low in early vegetation, total dry matter production is low. Therefore, the periods in which both the nutrients level and dry matter production are the most appropriate should be determined as harvesting periods of these feeds. The optimum harvesting time for grasses is the late booting (prior to earing) and early earing stage. Missing the optimum harvesting period of fodder plants reduces the quality and thus the milk yield if they are used in the rations. Optimum harvesting time of legumes is the late budding or early flowering stage. For silage cereals, dough formation stage is the most appropriate harvesting time. The above-mentioned harvesting periods should be chosen for hay and silage production from legumes and grasses.

If the **grass and legume are growing together,** they should be harvested when the grass bud out or during the rearing stage because their developments differ from each other.

Table 7.8 Change in the need for concentrate feed of dairy cattle yielding different levels of milk depending on the quality of the roughage[1] (Wattiux, 2000a)

Mil yield depending on the quality of the roughage (kg)			Cow weighing 600 Kg Milk fat ratio %		
Poor[2]	Moderate[3]	Good[4]	3.0	3.5	4.0
--	4	13	--	--	--
--	6	15	--	--	--
--	8	17	0.2	0.5	0.7
2	10	19	1.0	1.2	1.5
4	12	21	1.7	2.0	2.4
6	14	23	2.4	2.8	3.2
8	16	25	3.2	3.6	4.0
10	18	27	3.9	4.4	4.9
12	20	29	4.6	5.2	5.7
14	22	31	5.4	6.0	6.6
16	24	33	6.1	6.8	7.4
18	26	35	6.8	7.5	8.3
20	28	37	7.6	8.3	9.1
22	30	39	8.3	9.1	9.9
24	32	41	9.0	9.9	10.8
26	34	43	9.8	10.7	11.6[5]
28	36	45	10.5	11.5	12.5
30	38	47	11.2	12.3	13.3
32	40	49	11.9	13.0	14.1

1) Energy of the concentrate is assumed to be 2.95 Mcal ME/kg. If the concentrate contains low-energy feeds such as oat and rice husk, the energy level of the feed may fall up to 2.5 Mcal ME/kg. In such cases, the amount of concentrate should be increased by 15%. In the case that high-quality cereals, oil seeds and fat are used in the ration, the energy level of the ration can rise up to 3.2 Mcal ME/kg dry matter. In this case, the amount of concentrate can be reduced by 8%.

2) Poor quality roughage: It is assumed that cow is fed with poor quality roughages containing less energy than 1.4 Mcal ME/ kg DM such as straw, at an amount equaling to 1.5% of its live weight (9 kg DM for 600 kg live weight).
3) Moderate quality roughage: It is assumed that cow is fed with moderate quality roughages containing an energy level of 2.0 Mcal ME/ kg DM such as meadow hay at medium quality, at an amount equaling to 2.0% of its live weight (12 kg DM for 600 kg live weight).
4) High quality roughage: It is assumed that cow is fed with high quality roughages containing an energy level of 2.4 Mcal ME/ kg DM such as legume hay at early vegetative stage, at an amount equaling to 2.5% of its live weight (15 kg DM for 600 kg live weight).
5) Under conditions where 11 kg or more concentrate feed is consumed, farmer should be cautious about possible health problems such as acidosis, low fat level and feed consumption irregularity.

Pasture plants can be dried and ensiled for future use. However, dry matter losses may reach up to 30% during drying and ensiling processes if not considered drying and ensiling rules.

Silage

Feeds obtained by fermenting succulent feeds under anaerobic conditions are called silage. Basic points to be taken into account in the silage process are the selection of the plants material and dry matter level, and provision of anaerobic conditions. The most important point in the selection of the silage material is the water-soluble carbohydrate content. In this sense, the **grasses** are the best fodder plants. It is followed by other water-rich fodders such as citrus, beet and tomato pulps, cabbage and beet tops and leaf. **Legumes** have a high buffering capacity by virtue of having low water-soluble carbohydrate contents and high protein contents. Therefore, their capability of ensiling is low. Their ensilability can be improved by the use of organic acids, inoculants and materials high in easily soluble carbohydrate (such as molasses) content. Optimum dry matter level for ensiling is 35-40%. In silages containing a low level of dry matter, fermentation quality decreases, more losses of soluble nutrients due to leakages, and high humidity reduces the total dry matter and thus nutrient intake of the cattle. In silages with high dry matter content, fermentation does not occur sufficiently, and mould development and heating may be observed. Materials containing a high level of dry matter can be ensiled properly in oxygen-proof special silos. However, the problems may be encountered if concrete and soil silos are employed.

It is possible to create anaerobic conditions in silage process by decreasing particle size, rapid filling, and rapid covering without letting in any air inside. Accomplishing all these conditions will ultimately result in high quality silage. If the particle size of the silage material is large, compression will not be able to be performed properly, leading to the activity of

putrefying bacteria due to the air contained among the silage material, and thus to the spoilage of the silage. If the material is filled into the silo slowly, the material is exposed to air for a long time, thereby resulting in the prolonged activity of putrefying bacteria. This may spoil the silage and lower its quality. Corn silage is generally chopped small particle. Air exposure to the silage material occurs often with grass+legume mixture if they are not chopped well.

Corn silage has been common in our country recently. It is high-quality silage with high energy content. Its energy content further rises if it is harvested in the dough stage and has abundant grain. On the other hand, the most significant alternatives in locations where irrigation is not possible are small grains; wheat, barley, oat, triticale silages and their mixtures with legumes (vetch). In southern regions and transition regions where irrigation is possible and climate is appropriate, small grains and legume mixtures can be harvested as primary product in April-May to produce silage or fodder. Instead, corn can be cultivated as secondary product. Thus, it is possible to obtain a higher amount of fodder from a unit area.

Use of salt is recommended up to 2% in silage process. Salt is a preserving additive. However, salt content of silage may reaches up to 8% in silages containing a dry matter level of 25%, when 2% salt applied to fresh material. This amount of salt is high. As the preserving nature of salt will be needed rather on the surfaces contacting with oxygen, it should be, therefore, used as a surface preserver above the silage pit before closing down the silo.

Stalks, Straws, Hull and Husks

Plant by-products are the parts of the plants left on the field after the main crop is harvested. These plant residues are husk, stalks and straws left from cereal production, and straws and hulls left from legume production. They are generally cheap products that contain high levels of indigestible fiber and lignin and low levels of protein, and need to be chopped and ground before using in feeding. They should be used in the feeding of low yielding cows and are not in lactation. Cotton seed hull, peanut hull, soybean hull, corn cob, corn stalks and almond hull could be used as alternative to straw.

Pulps

When water-rich fodders such as industrial waste, beet pulp, apple pulp, citrus pulp and wet brewery are properly stored, they can be used effectively in rations and reduce the cost of feeding. The most important problem related to pulps is that they have low dry matter content (10-20%) and high transportation costs. Their use in rations depends on their characteristics. Pulps are generally savory and restrain the cattle from selecting feeds from the feed bunk since they give a whole shape to the feed so that the cattle eat the whole feed mixture without sorting. However, their use should be decreased total dry matter content of the ration below 55%. Otherwise, they may restrict the feed consumption of the cattle. This may be applied to all water-rich feeds.

Roots and Tubers

Sugar and fodder beet, carrot, turnip and potato are water-rich feeds that can be included in this group. They are produced for human consumption, except for the fodder beet. Wastes of other plants listed above can be used as fodder. Their dry matter (10-20%), cellulose and protein contents are low.

7.7.2 Concentrates

A concentrate is a feed or a feed mixture, which supplies protein, carbohydrate and fat at a high level, but contains less than 18% crude fiber with low moisture. Concentrate feeds can be classified in two groups, namely, energy feeds and protein feeds. **Energy feeds** contain less crude fiber than 18% and less crude protein than 20%. **Protein feeds** contain more crude protein than 20%

The most important energy feeds are cereals such as corn, barley, wheat, oat, rye and sorghum. Their protein level varies between 9-15% and starch level varies between 40-70%. Barley and oat are predominantly used as ruminant feed. Grain processing and their starch degradability play important role using them for diet formulation. While whole cereals can be used for sheep and goats, they should be grounded, crumbled or crushed for cattle. Fine grinding is not preferred because it increases the risk of acidosis and acidosis related problems. On the other hand, wheat and barley starch degrades in the rumen faster than corn and sorghum starch. This may result in increased acidity of the rumen. Therefore, the risk of acidosis should be borne in mind and roughage balance, particle size of the roughage and the use of buffer substance (NaHCO3, MgO) in the ration should be taken into account if the starch in the ration is predominantly based on wheat and wheat products.

Protein feeds used in the rations for dairy cattle are predominantly oil cakes, which are by-products of oil industry. Oil seed cakes are produced by compression or extraction. Mechanically extracted meals have oil content of 4-5%. However, solvent extracted meals have oil content less than 1%. Heat treatment during extraction may decrease the ruminal degradability of proteins. Therefore, the level of bypass protein (rumen undegradable protein) is higher in oil seed meals produced by extraction. It is desired that 35-40% of the total protein is rumen undegradable protein in high yielding dairy cows. Hence, energy-protein balance of the ration and fermentable energy-rumen degradable protein balance should be well-established. The protein/energy resources should be evaluated in this sense as well. The protein content of oil cakes produced in our country is changing markedly according to region and oil factories. Therefore, protein analysis should be conducted on the oil seed meals before purchasing. Protein ratio of oil seed meal is associated with the amount of hull mixed into oil seed meal. Protein content of oilseed meals from dehulled seeds may reach up to 40-50%.

Urea can be used as a nitrogen source in the rations for ruminants. Crude protein equivalent of urea is approximately 290%. However, urea should not be used in early lactation or in the dry period. If used, it should be ensured that the energy level of the ration is high and this energy predominantly comes from readily degradable carbohydrates.

From time to time, whole oil seeds (cotton, soybean, sunflower) can be used in rations in order to diminish the negative energy balance in early lactation. They are preferable as they have high energy and protein content and fat not in free form; however urease and antitrypsic factors particularly in soybean and gossypol in cottonseed can cause problems. Heat treatment can destroy the undesired characteristics of soybean. However, gossypol in cottonseed may lead to abortion cases. Therefore, attention should be paid while using cottonseed in rations.

Another notable group in concentrate feeds is **milling by-products** such as wheat, rice and corn bran. They contain a moderate level of protein (15-20%). If corn bran is soaked into maceration liquid, its protein content may rise up to 30%. Bran is a product that has a high cellulose and P content. Therefore, more attention should be paid to Ca/P balance when they are used in rations.

Use and limitations of alternative feed resources for dairy cattle are presented in Table 7.9. Nutrient compositions of the some feedstuffs are given in Table 7.10.

Table 7.9 Use and limitations of alternative feeds for dairy cattle.

Feedstuffs	MAX, % DM*	Kg/cow	Remark
Urea, max.	1.5	0.10-0.15	Overuse may result in toxicity, abortion, early embryonic loss and excessive urination.
Dry molasses	6	1	Overuse may diminish appetite due to high K. It may increase the risk of acidosis due to its high sugar content.
Molasses	10	1.5	Overuse may result in agglomeration in the feed. It may disrupt the taste due to high K content.
Peanut hull		2	It can be used instead of hay.
Soybean hull	20	2-3	
Wheat bran	30	5-6	Overuse may restrict feed consumption due to its coarse structure.
Wheat	15		Its starch degradability is very high. It may create acidosis problem.
Cottonseed	15	2-3	It may result in early embryonic loss and abortion due to its gossypol content. If gossypol content is high, it should not be used over 1 kg.
Cottonseed meal	20	2.5	
Cottonseed hull	15	3	
Soybean	25	3	It should not be used over 2 kg if no heat treatment was applied.
Brewery grain	25	3-4 dry	12-15 kg/cow can be used in wet form.

Feedstuffs	MAX, % DM*	Kg/cow	Remark
DDGS	25	3-4	
Citrus pulp (6.7% CP)	10	4 dry 10-12 fresh	It contains 30-35% pectin and around 20% sugar in dry matter. Dry pulp can be used up to 30% in concentrate feed.
Corn gluten meal (60%CP)	15	3	
Almond hull (2.7% CP)	15	5-6 dry	
Apple pulp (4.9% CP)	15	15 fresh	It contains 19% pectin in dry matter. Its cellulose digestion is high.
Green beans (25% CP)	10	10 kg fresh	
Sugar beet pulp	30	18-20 fresh	It contains 25% pectin in dry matter.
Canola meal	15		Erucic acid and glocosinalate content is high.
Cottonseed meal	15		Gossypol content is high. Under normal feeding conditions, gossypol toxicity is not a problem for dairy cattle.
Fat	4-6	0.5-1.0	Fat from ingredients should be considered; total fat should not exceed 6% in the diets.
Culled Potatoes and residues	20	10-15 fresh 3-4 kg KM	Fresh potato should not be suddenly added into or removed from the ration. Attention should be paid while using green potatoes.
Carrot and carrot residues	20	10-15 fresh	It may create color problem in carcass and milk fat due to its high carotene content.
Cabbage and cabbage residues	15	15-20 fresh	Its protein content is high (20% DM)
Whey, 6-7.5% DM		50-60 L	If the ration's humidity is low, it can be used up to 5 lit. per animal. If silage and water-rich feeds are used in the TMR and the ration's humidity is high, it should not be used above 2 lit.
Bakery wastes (stale bread, cake, biscuit, etc.)	10	4-5	It may reduce the milk fat.
Beans, broad beans, peas, chick peas etc.	10	2	Antinutritional factors content may pose problems.

*Amounts to be used in the TMR.

1) Feed ingredients given above should be slowly added into and removed from the rations. They are the maximum limits recommended. These values should be reached at the end of adaptation periods.
2) Other ration balances (energy-protein; slow-fast degradable starch; slow-fast degradable protein) should be taken into account as well.
3) Mould growth and aflatoxin should be checked during the storage of water-rich feeds.

Table 7.10 Nutrient contents of feed raw materials commonly used in dairy cattle rations

FEEDS	DM	ME	CP	RDP	CF	ADF	NDF	EE	Ash	Ca	P
	%	Mcal/kg	%	%CP	%	%	%	%	%	%	%
Barley	89	2.70	10.68	24.92	4.45	6.23	16.91	1.87	2.67	0.05	0.34
Sunflower meal	91	1.88	28.21	31.85	24.57	29.12	40.04	2.18	6.37	0.36	0.94
Wheat	89	2.83	12.46	20.47	2.67	3.56	10.68	2.05	1.78	0.04	0.38
Wheat bran	89	2.25	15.13	24.92	9.79	11.57	40.94	4.01	6.23	0.12	1.15
Rye	89	2.64	10.68	17.80	1.78	8.01	16.91	1.51	1.78	0.06	0.35
Cottonseed	91	3.13	20.93	34.58	26.39	35.49	42.77	16.20	3.64	0.13	0.58
Molasses	77	2.09	6.93					0.15	9.24	0.09	0.02
Corn	88	2.80	7.92	51.04	1.76	2.64	7.92	3.78	1.76	0.02	0.26
Corn gluten meal	91	2.93	60.97	54.60	3.64	5.46	10.01	2.37	2.73	0.05	0.49
Corn germ meal	90	3.10	21.00	50.00	14.5	15.00	47.00	13.00	3.00	0.27	0.90
Corn bran	91	2.50	10.01	0.00	9.10	15.47	46.41	5.73	2.73	0.04	0.14
Cottonseed meal	90	2.51	43.20	37.80	11.70	15.30	22.50	1.62	6.30	0.20	1.13
Soybean meal	91	2.76	44.59	31.85	5.46	9.10	13.65	1.46	6.37	0.35	0.65
Lentil	89	2.80	28.00		13.00	14.00	25.00	1.42	5.00	0.06	0.32
Beet pulp, dry	91	2.47	10.01	40.04	19.11	19.11	37.31	0.64	5.46	0.59	0.07
Full fat soybean	88	2.96	35.20	30.80	7.92	9.68	13.20	16.54	4.40	0.24	0.56
Barley straw	90	1.40	3.60	63.00	37.80	46.80	70.20	1.71	6.30	0.30	0.07
Barley silage	35	0.75	4.20	7.70	11.90	12.95	20.30	1.05	3.15	0.16	0.11
Triticale silage	34	0.71	4.76	20.00	10.20	13.26	19.04	1.22	3.00	0.20	0.12
Clover, hay	88	1.72	14.08	22.00	29.92	35.20	45.76	1.76	7.04	1.06	0.20
Clover, silage	30	0.60	5.40	5.70	8.40	11.10	14.70	0.90	2.70	0.42	0.09

FEEDS	DM	ME	CP	RDP	CF	ADF	NDF	EE	Ash	Ca	P
	%	Mcal/kg	%	%CP	%	%	%	%	%	%	%
Clover, green	24	0.53	4.56	4.32	6.48	8.16	11.04	0.72	2.16	0.32	0.06
Oat silage	35	0.76	4.20	7.35	10.85	13.65	20.65	1.12	3.50	0.12	0.11
Wheat, green	21	0.54	4.20	3.36	3.78	6.30	10.50	0.84	2.73	0.07	0.08
Wheat straw	91	1.38	2.73	54.60	39.13	52.78	73.71	1.64	7.28	0.15	0.05
Wheat silage	33	0.70	3.96	6.93	9.24	12.21	20.46	1.06	2.64	0.13	0.09
Meadow hay	88	1.85	8.80	26.40	29.04	36.08	55.44	2.64	5.28	0.53	0.18
Grass silage	30	0.66	3.30	7.20	9.60	11.70	18.00	1.02	2.40	0.21	0.07
Vetch hay	89	1.87	16.02	12.46	26.70	29.37	42.72	1.60	7.12	1.11	0.30
Corn silage, dough stage	34	0.88	2.72	9.52	7.14	9.18	15.64	1.05	1.70	0.10	0.08
Corn silage, milk stage	26	0.61	2.08	4.68	6.76	8.32	14.04	0.73	1.56	0.10	0.07
Corn stalk	80	1.71	4.00	24.00	28.00	35.20	56.00	1.04	5.60	0.28	0.15
Beet pulp, wet	17	0.47	1.87	5.95	3.40	3.91	8.16	0.12	1.02	0.12	0.01
Wet brewery grain	23	0.71	5.98	11.96	2.99	4.83	10.12	1.75	0.92	0.07	0.14
Triticale + Vetch (60/40) silage	35	0.80	3.60	22.00	7.90	12.70	14.10	3.50	4.00	0.25	0.10
Potato	20	0.62	1.60		1.00	0.40	1.60	0.04		0.01	0.03
Cabbage	11	0.35	1.80		1.10	1.32	1.65	0.14	0.90		
Carob by-products	34	0.83	2.94		7.00	8.00	14.00	0.39	0.87	0.04	0.02
Citrus pulp-wet	21	0.62	1.53	90.00	5.67	4.60	5.04	0.98	0.94	0.38	0.02
Dicalcium phosphate	96								90.24	21.12	17.90
Limestone	98								96.04	33.32	
Salt	95								85.50		

DM: dry matter, **Me:** metabolizable energy, **CP:** crude protein, **RDP:** rumen degradable protein, CF: crude fiber, **EE:** ether extract

References

- Anonymous, 2010. Grouping Dairy Cows. http://www.extension.org/pages/11320/grouping-dairy-cows/print/
- Anonymous, 2011. Body condition scoring. http://www.vetmed.ucdavis.edu/vetext/INF-DA/INF-DA_BCS.HTML
- Barker, A. R., Schrick, F. N., Lewis, M. J., Dowlen, H.H., Oliver, S. P., 1998. Influence of Clinical Mastitis During Early Lactation on Reproductive Performance of Jersey Cows. J. Dairy Sci. 81: 1285–1290.
- Beever, D. E. 2006. The impact of controlled nutrition during the dry period on dairy cow health, fertility and performance. Anim. Reprod. Sci. 96:212–226.
- Bewley, J.M., Pas, I., Schutz, M.M, 2008. Review: An Interdisciplinary Review of Body Condition Scoring for Dairy Cattle The Professional Animal Scientist 24 (2008):507–529.
- Blecha, F., 1988. Immunomodulation: a means of disease prevention in streesed livestock. J Anim Sci, 66 (8): 2084-90, 1988.
- Blood, D.C., Radostıts O.M.,1989 Diseases of the newborn, Veterinary Medicine, 7th Ed., Bailliere Tindall, London, 95-121, 1989.
- Boyd H. 1977. Anoestrus in cattle. Veterinary Record 100: 150-153.
- Brown, E. G., VandeHaar, M. J., Daniels, K. M., Liesman, J. S., Chapin, L. T., Forrest, J. W., Akers, R. M. ,Pearson, R. E, Weber Nielsen M. S., 2004. Effect of Increasing Energy and Protein Intake on Mammary Development in Heifer Calves. J. Dairy Sci. 88:595–603
- Butler, W.R. 2000. Nutritional interactions with reproductive performance in dairy cattle. Anim. Reprod. Sci. 60, 449–457.
- Castaneda-Gutierrez, E., Overton, T.R., Butler, W.R., Bauman, D.E. 2005. Dietary supplements of two doses of calcium salts of conjugated linoleic acid during the transition period and early lactation. J. Dairy Sci. 88:1078–1089.
- Caton, J., K. Vonnahme, J. Reed, T. Neville, C Effertz, C. Hammer, J. Luther, D. Redmer, and L. Reynolds. 2007. Effects of maternal nutrition on birth weight and postnatal nutrient metabolism. in: Proc. International Symposium on Energy and Protein Metabolism. EAAP Publication 124:101-102.
- Doğan, B.H., Çimen, Ö., Göncü Karakök, S., 2007. Sığır Yetiştiriciliğinde Sürü Yönetim Uygulamaları ile Bağışıklık Sistemi Arası İlişkiler. 3. Ulusal Zootekni Öğrenci Kongresi. 17-18 Mayıs, 2007, Maraş.
- Domecq, J.J., Skidmore, A.L., Lloyd, J.W., Kaneene, J.B., 1995. Validation of body condition scores with ultrasound measurement of subcutaneous fat of dairy cows. J. Dairy Sci. 78(10):2308-2313.
- Drackley, J.K. 1993. Fatty liver and ketosis in dairy cows. Proc. 4-State Applied Nutr. Conf. La Crosse, WI.

- Ferguson, J.D. 2005. Nutrition and reproduction in dairy herds, Vet. Clin. N. Am. Food Animal Pract. 21:325–347.
- Flesh J., Harel W., Nelken D., 1982. Immunopotentiating effect of levamisole in the prevention of bovine mastitis, fetal death and endometritis. Vet. Rec.,17;111(3), 56 -57, 1982.
- Gardner DS, Ozanne SE, Sinclair KD. Effect of the early-life nutritional environment on fecundity and fertility of mammals. Philos Trans Roy Soci B: Biol Sci 2009;364:3419–3427.
- Garnsworthy, P. C. 2007. Body condition score in dairy cows: Targets for production and fertility. Pages 61–86 in Recent Advances in Animal Nutrition 2006. P. C. Garnsworthy and J. Wiseman, ed. Nottingham University Press, Nottingham, UK.
- Garnsworthy, P.C., Jones, G.P. 1987. The influence of body condition at calving and dietary protein supply on voluntary food intake and performance in dairy cows. Anim. Prod. 44:347–353.
- Garnsworthy, P.C., Sinclair, K.D., Webb, R. 2008a. Integration of physiological mechanisms that influence fertility in dairy cows. Animal 2: 1144–1152.
- Garnsworthy, P.C., Lock, A., Mann, G.E., Sinclair, K.D., Webb, R. 2008b. Nutrition, metabolism and fertility in dairy cows: 1. Dietary energy source and ovarian function. J. Dairy Sci. 91 3814–3823.
- Garnsworthy, P.C., Webb, R. 1999. The Influence of Nutrition on Fertility in Dairy Cows. Recent Advances In Animal Nutrition, 39-58.
- Garrett R. Oetzel, DVM, MS, 2007. Herd-Level Ketosis – Diagnosis and Risk Factors. Preconference Seminar 7C: Dairy Herd Problem Investigation Strategies: Transition Cow Troubleshooting AMERICAN ASSOCIATION OF BOVINE PRACTITIONERS 40th Annual Conference, September 19, 2007 – Vancouver, BC, Canada. http://www.vetmed.wisc.edu/dms/fapm/fapmtools/2nutr/ketosis.pdf
- Göncü, S., Boğa, M., Kılıç, Ü., Görgülü, M., Doran, F., 2010. Effects of Feeding Regime Without Roughage on Performances and Rumen Development of Calves During Preweaning Period. Journal of Agricultural Sciences 16(2010)123-128.
- Görgülü, M., 2007. Ruminant (Buyuk ve Kucukbaş Hayvan) Besleme. Ç.Ü.Z.F Ders notu. http://www.muratgorgulu.com.tr/ckfinder/userfiles/files/RUMINANT%20BESLEME-KITABI.pdf
- Görgülü, M., 2011. Süt Sığırcılığı İşletmelerinde TMR Uygulaması. http://www.muratgorgulu.com.tr/altekran.asp?id=83
- Görgülü, M., Göncü, S., Serbester,U., Kıyma, Z., 2011. Süt Sığırlarınının Üremesinde Beslemenin Rolü.(Çağrılı). 7. Zootekni Ulusal Bilim Kongresi, 14-16 Eylül 2011, Adana.
- Görgülü, M., Özkütük, K., Yurdseven, S., Göncü, S., Türemiş,A., 1999. Süt İkame Yemi İle Buzağı Büyütmenin Buzağı Performansına Etkileri. Uluslararası Hayvancılık '99 Kongresi, 21-24 Eylül, 1999,(99-102),İzmir.

- Grant, R.J., Albright, J.L. 2001. Effect of Animal Grouping on Feeding Behavior and Intake of Dairy Cattle. J. Dairy Sci. 84(E.Suppl.):E156-E163.
- Grummer, R.R., Winkler, J.C., Bertics, S.J., Studer, V.A. 1994. Effect of propylene glycol dosage during feed restriction on metabolites in blood of prepartum Holstein heifers. J. Dairy Sci. 77: 3618-3623.
- Guo, J., Peters, R. R., Kohn, R. A. 2007. Effect of a Transition Diet on Production Performance and Metabolism in Periparturient Dairy Cows. J. Dairy Sci. 90:5247–5258.
- Hayirli, A., Grummer, R.R., Nordheim, E.V., Crump, P. M. 2002. Animal and dietary factors affecting feed intake during the prefresh transition period in Holsteins. J. Dairy Sci. 85:3430–3443.
- Hodgson J 1965. The effect of weaning treatment on the development of solid food intake in calves, Animal Production 7, 7–17.
- Ingvartsen, K. L. 2006. Feeding- and management-related disease in the transition cow: Physiological adaptation around calving and strategies to reduce feeding-related diseases. Anim. Feed Sci. Tech. 126:175-213.
- Janovick, N. A., Drackley, J. K., 2010. Prepartum dietary management of energy intake affects postpartum intake and lactation performance by primiparous and multiparous Holstein cows. J. Dairy Sci. 93: 3086-3102.
- Kehoe, S. I., Heinrichs, A. J., Moody, M. L., Jones, C. M. M. R. Long, 2011. Comparison of immunoglobulin G concentrations in primiparous and multiparous bovine colostrum. Professional Animal Scientist June 2011 vol. 27 no. 3 176-180
- Keleş, A.E., Görgülü, M., Göncü, S., 2011. Buzağılarda Kaba Yemsiz Büyütmenin Sütten Kesim Öncesi Ve Sonrası Dönemde Performans Üzerine Etkileri. Uluslararası Katılımlı I. Ali Numan Kıraç Tarım Kongresi ve Fuarı 27-30 Nisan, 2011
- Ketelaars, J.J.M.H.ve Tolkamp, B.J. 1992. Towards a new theory of feed intake regulation in ruminants. 1. Causes of differences in voluntary feed intake, critique of current views. Livestock Production Science 30, 269–296
- Logan E.F., 1996 Neonatal immunity with particular reference to colostrum. Cattle Practice, 4, 273-84.
- Matthews, S.G. 2002. Early programming of the hypothalamopituitary- adrenal axis. Trends Endocrinol Metab 13, 373–380.
- McDonald L E. 1980. Veterinary endocrinology and reproduction. Lea and Febiger, Philadelphia, USA. 560 pp.
- Morrow, DA, 1976. Fat cow syndrome. J Dairy Sci. 1976 Sep;59(9):1625.
- Mulligan, F. J., O'Grady, L., Rice, D. A., Doherty, M. L. 2006. A herd health approach to dairy cow nutrition and production diseases of the transition cow. Animal Reproduction Science 96: 331–353.

- National Research Council. 2001. Nutrient Requirements of Dairy Cattle. 7th Ed. National Academy Press, Washington, D. C.
- Peron, N., 1984. Efecto del nively tipo de alimentacion en el comportamiento reproductivo de las novillas. Tesis Cand. Dr.Cs.Centro Investigacion Mejoramiento Animal, La Habana Cuba.
- Petitclerc, D., P. Dumoulin, H. Ringuet, J.Matte, and C. Girard. 1999. Plane of nutrition and folic acid supplementation between birth and fourmonths of age on mammary development of dairy heifers. Can. J. Anim. Sci. 79:227–234.
- Pırlo, G., Capellettı, M., Marchetto, G. 1996. Effects of Energy and Protein Allowances in the Diets of Prepubertal Heifers on Growth and Milk Production. 1997 J Dairy Sci 80:730–73.
- Rees, W., 2002. Manipulating the sulfur amino acid content of the early diet and its implications for long-term health. Proc. Nutr. Soc. 61, 71–77.
- Reid, J. T., J. K. Loosli, G. W. Trimberger, K. L. Turk, S. A. Asdell, and S. E. Smith. 1964. Causes and prevention of reproductive failures in dairy cattle. IV. Effect of plane of nutrition during early life on growth, reproduction, production, health, and longevity of Holstein cows. Cornell Univ. Agric. Exp. Stn. Bull. 987. Cornell Univ., Ithaca, NY
- Renkema J.A., Stelwageni, J., 1979. Economic Evaluation Of Replacement Rates In Dairy Herds Reduction Of Replacement Rates Through Improved Health. Livestock Production Science, 6 (1979) 15—27
- Rhind, S. M. 2004. Effects of maternal nutrition on fetal and neonatal reproductive development and function. Anim. Reprod. Sci. 82-83: 169-181.
- Rukkwamsuk, T., T. A. M. Kruip, and T. Wensing. 1999. Relationship between overfeeding and overconditioning in the dry period and the problems of high producing dairy cows during the postparturient period. Vet. Q. 21:71–77.
- Sbrensen, J.T., Enevoldsen, C., 1991. Effect of Dry Period Length on Milk Production in Subsequent Lactation. J Dairy Sci 74:1277-1283
- Schei I, Volden H, Baevre L. 2005. Effects of energy balance and metabolizable protein level on tissue mobilization and milk performance of dairy cows in early lactation. Liv. Prod. Sci. 95: 35-47.
- Schillo, K. K., J. B. Hall, and S. M. Hileman. 1992. Effects of nutrition and season on the onset of puberty in the beef heifer. J. Anim. Sci. 70:3994–4005.
- Sellers, P., 2001.A guide to colostrum and colostrum management fro dairy cows. http://www.aphis.usda.gov/vs/ceah/ncahs/nahms/dairy/bamn/BAMNColostrum.pdf
- Shaver, R., 2005. Feeding to Minimize Aciodosis and Laminitis in Dairy Cows. Proceedings of the 7 Western Dairy Management Conference _ March 9-11, 2005

- Sniffen C.J., R.W. Beverly, C.S. Mooney, M.B. Roe, A.L. Skidmore. 1993. Nutrient requirement versus supplied in the dairy cow: strategies to account for variability. J. Dairy Sci. 76:3160-3169.
- Stone, W. C. 2004. Nutritional approaches to minimize subacute ruminal acidosis and laminitis in dairy cattle. J. Dairy Sci. 87:(E. Suppl.):E13-E26
- St-Pierre, N.R., C.S. Thraen. 1999. Animal Grouping Strategies, Sources of Variation, and Economic Factors Affecting Nutrient Balance on Dairy Farms. J. Dairy Sci. 82 (Suppl. 2):72-83.
- Studer, E., 1998. A veterinary perspective of on-farm evaluation of nutrition a reproduction. J. Dairy Sci. 81(3):872-876.
- Swanson. E. W. 1960. Effect of rapid growth with fattening of dairy heifers on their lactation ability. J. Dairy Sci. 43:377.
- Tamminga, S., Hof, G., 2000. Feeding Systems for Dairy Cows. CAB International 2000. Feeding Systems and Feed Evaluation Models. Animal Nutrition Group, Wageningen http://agronica.udea.edu.co/talleres/Udenar/Feeding%20Systems%20and%20Feed%20Evaluation%20Models/346Xch6_OK.pdf
- Thatcher, W. W., Santos, J.E.P., Silvestre, F.T., Kim, I.H., Staples, C. R. 2010. Perspective on Physiological/Endocrine and Nutritional Factors Influencing Fertility in Post-partum Dairy Cows. Reprod Dom Anim 45 (Suppl. 3), 2–14.
- Thorp, C.L., Wylie, A.R.G., Steen, R.W.J., Shaw, C. & Mcevoy, J. D. (2000) Effects of incremental changes in forage: concentrate ratio on plasma hormone and metabolite concentrations and products of işkembe fermentation in fatting beef steers. Anim. Sci. 71: 93–109.
- Tolkamp, B.J. ve Ketelaars, J.J.M.H. 1992. Towards a new theory of feed intake regulation in ruminants. 2. Costs and benefits of feed consumption: an optimization approach. Livestock Production Science 30, 297–317.
- Treacher, R.J., Reid, I.M., Roberts, C.J., 1986. Effect of Body Condition At Calving on The Health and Performance of Dairy Cows. Anim. Prod. 43: 1-6.
- Valentine. S. C.. R. C. Dobos, P. A. Lewis, B. D. Bartsch, and R. B. Wickes. 1987. Effect of liveweight gain before or during pregnancy on 7 gland development and subsequent milk pduction of Australian Holstein-Friesian heifers. Aust. J. Exp. Agric. 27:195-204
- Vonnahme, K. A. 2007. Nutrition during gestation and fetal programming. The Range Beef Cow Symposium XX December 11-13, Fort Collins, Colorado.
- Wardrop ID 1961. Some preliminary observations on the histological development of the forestomachs of the lamb. 1: Histological changes due to age in the period from 46 days of foetal life to 77 days post-natal life, The Journal of Agricultural Science 57, 335–341.

- Waterman,D.F., 2005. Sources of nutrients for milk replacers and dry starter feeds and what factors impact quality. NRAES-175, Cooperative Extension, pp. 96-115.
- Williams, C.B. and P.A. Oltenacu. 1992. Evaluation of Criteria Used to Group Lactating Cows Using a Dairy Production Model. J.Dairy Sci. 75:155-160.
- Wiltbank, M. C., Weigel, K. A., Caraviello, D. Z., 2007. Recent studies on nutritional factors affecting reproductive efficiency in U.S. dairy herds. Western Dairy Management Conference, March 7-9, Reno, NV.
- Wright, I.A., Russel, A.J.F., 1984. Partition of body condition scoring in mature cows.. Anim. Prod. 38:23-32.

8. CHAPTER

Forage Crop Production

Prof. Dr. Cengiz SANCAK - Prof. Dr. Yaşar KARADAĞ

Forage is herbaceous plant material that is fed to livestock in the form of hay, silage or pasture and cultivated within the scope of field agriculture. This chapter will at first dwell on the importance of forage crops and then inform about modes of agriculture of the most cultivated forage crops in Turkey such as alfalfa, sainfoin, maize and vetch. In this chapter, we will also touch upon major practical information regarding the production, storage and use of feeding silage due to its importance in cattle breeding.

8.1 The Importance of Forage Crops

The benefits of forage crops can be examined in various aspects. The major ones are listed as follows:

- Animal-feeding
- Crop rotation
- Soil and water conservation
- Green manure

Forage farming and grass pastures are the most economical and abundant sources for animal feeding stuffs. The main incentive for forage crops is animal breeding. Animal breeding includes forage crops and usually the residues of vineyards and orchards as well as stem, hay, pulp, factory wastes and some grains. The forage crops, however, have all the quality factors to play a primary role in increasing number of animal products as they are highly productive, easy to cultivate and economical when compared to other vegetal materials. For instance, under favorable circumstances, plants such as alfalfa and trefoil etc. can yield 2 tons/da of fodder as plants such as maize and sorghum can produce 5 tons/da of fodder.

The forage crops sufficiently contain – at a balanced proportion – nutrients notably the cellulose necessary for stomach micro-flora of livestock. The most economical and balanced mineral and vitamin sources are forage crops in stock farming. The reproduction capacity for animals with a sufficient and balanced diet of forage crops considerably improves. The animals fed on forage crops produce better and high-quality animal products.

The forage crops leave plenty of root and trunk residues on the soil and enable the soil to be rich in organic substances. Herbaceous plant legumes fixate nitrogen in the soil through nodes in their roots. The plants cultivated subsequent to forage crops optimally benefit from

the nitrogen. Forage crops, thanks to their deep and crop-out root systems, enable them to take better advantage of various soil stratums. They make it possible to distribute the labor force to all seasons. They prevent water and wind erosions since they cover the soil for most of the year.

In addition to all of these benefits, they cater for the need of grass for livestock.

They cease the kinetic energy of raindrops and prevent the surface erosion. They increase the infiltration speed of soil and thus minimize potential water losses. They prevent the soil erosion accompanied by wind and rain water since their roots, rhizomes and stolons are in a shape of grass lid tightened with soil granules.

They are used in the rehabilitation of salty and alkaline soil. It is possible to cultivate particularly salt-resistant forage crops. For instance: *Agropyron elongatum, Cynodon dactylon, Hordeum vulgare, Lotus corniculatus, Atriplex* plant. These plants leave a good deal of root residues in the soil and restructure the physical nature of the soil. This rehabilitated soil thus offers an opportunity for breeding other cultigens.

It is the ploughing and blending of plants in the soil with a view to improving the soil and increasing the amount of organic substance and nitrogen as the plants produce plenty of vegetative components within a short period of time. Green manure procedures can be effective where the amount of precipitation is over 500 mm. The practices in arid and semi-arid regions have failed.

The plants cultivated for green manures in systems where grain-fallow crop rotation is put into practice in arid and semi-arid regions dry up the water in stock. Perennial legumes (alfalfa, trefoil, melilot) and annual legumes (vetch, feed pea, lathyrus, lupine) are recommended for green manuring. Green manuring would have a positive impact on the next main plant and enhance the productivity since it provides the soil with nutrients such as N.

The forage crops have a major prominence in lands allocated for agriculture, where there is a transition from dry farming to irrigated farming and where the top layer soil of agricultural lands is taken off for one reason or another. They develop a shadow heating with ground surface components that are lush and dense and thus improve the productivity of microorganism in the soil. Some forage crops are cultivated in building recreational areas and green belts as well as in greening parks, gardens, highway slopes, lakes, ponds, dam locations, soccer, rugby and golf fields and airports. Some of the forage crops are used in perfume and pastrami industries as well. Feeding legumes are of importance in production of high-quality honey (Sainfoin, white alfalfa, yellow sweet clover, bird's-foot trefoil, phacelia etc.).

8.2 Agricultural Production Methods for Some of the Important Forage Crops

8.2.1 Alfalfa (Medicago sp.) Genus

Even though 62 species have been reported regarding to the alfalfa *(Medicago)* genus, the number of species discovered thus far is 54. It is concluded that 8 out-of-scope alfalfas for genus concept are within a taxonomic group under the species or have the origin of a

crossbreed. 35 alfalfas out of 54 species are annual feeding legumes as 17 of them are perennial and 2 of them are biennial. The most of the alfalfa species, as is seen, is annual. Some of the major alfalfa species are: alfalfa *(Medicago sativa)*, yellow lucerne *(Medicago falcata)*, alfalfa *(Medicago media)*, black medick *(Medicago lupulina)*, barrel medick *(Medicago truncatula)*.

Having a substantial capacity for adaptability, an alfalfa grows both in a cold climate such as Siberia and Alaska and in a hot and arid climate. It is likely to come across with alfalfa species almost all over Turkey since they are widespread even at altitudes over 3000 m.

Alfalfa (*Medicago sativa* L.)

The alfalfa is called 'lucerne' as well in many texts. It is the queen of forage crops. The alfalfa is the most important one among other forage crops and makes up 90-95 % of alfalfa farming. It economically yields for 7 to 10 years under normal conditions even though it survives for many years since it is a long-lasting plant where it can adapt well. Its protein productivity is quite high per unit area. It contains at least 10 vitamins (It is rich in Carotin (provitamin A), tocopherol (Vitamin E), Vitamin K and Xantophyll). The alfalfa reserves many substances enhancing the productivity in meat, milk and semen. According to 2009 data, the alfalfa is planted approximately on a 570-hectare area (Figure 8.1).

Figure 8.1 Alfalfa (left), alfalfa seed (enlarged photo, right).

The alfalfa does not require much in terms of soil characteristics. The optimal soil would be the ones with loam, lacking in sand and lime at an adequate rate. This quality is of importance since they are quite sensitive to soil pH. The alfalfa grows in soil with a 6,5 to 7,5 pH. Polyacid soil must be limed at least 2 months prior to the sowing. The alfalfa can grow at a temperature between -50°C and + 60°C. The optimum temperature would be 25-26°C'. It is drought-resistant. It can grow where the annual amount of precipitation is around 350-450 mm without any irrigation but its number of species is limited to 1 or 2. An alfalfa yields best in hot areas with means of irrigation. The preparation of a seed bed is a must since the seed is too small. 1,5-2 kg/da would be enough for a sowing machine (planter) as 3 or 4 kg/da would be ideal for a broadcast sowing. It must be intercropped with feeding legumes so that

it would not would lead to an inflation in facilities founded for grazing. It must be prepared in a way where the alfalfa ratio would be below 50 %. The sowing periods must be spring and late Summer-Autumn. It can be cultivated in October-November in coastal regions. It must be cultivated in late August-early September (before autumn-frost manifests itself) in Central Anatolia-Transition climates. Alfalfa seedlings are highly cold-sensitive. Even a mildly cold weather can cause a substantial damage in early growth periods. It must be planted in Central Anatolia-Eastern Anatolia (with harsh climatic conditions in winter) where it leaves no room for Early Autumn sowing. It can be planted as a companion plant where weeds and duff layer prevail. It is a must to be attentive to alfalfa seedlings of October to be rich in physical and biological values and have a certificate. Some refined seeds without any weed and notably any dodder must be planted where there is no certification of seedling. A alfalfa seedling, if possible, must be inoculated with bacteria. More nodules and plants would be able to store more nitrogen. The alfalfa sowing methods: Broadcast sowing of seeds manually or by a machine and row sowing with a planter. The sowing must be performed in narrow lands with a wooden harrow and in large lands with an agricultural planter or a specialized Brillor (induced) planter. An alfalfa must be fertilized with 2-5 kg/da N and 10-15 kg/da P_2O_5 . The nitrogen must be supplied for once following the sowing as P_2O_5 must be annually given at the same amount. The weeds can be cleaned out in narrow spaces by hoeing. It is possible to put a stop to weeds in large spaces particularly with an early reaping or one can resort to herbicides in this period. Sprinkler irrigation and flooding irrigation are among other options.

The flooding irrigation must be performed when alfalfa rows begin to appear on the surface for the first time (approximately 15-20 days after the sowing). The land must be flat for irrigation, which must be performed in the best way possible in order not to give rise to thinner leveling. The irrigation is performed two times: A week prior to the sowing and right after the sowing. The lands allocated for seed production must not be irrigated in periods of blooming and seed ripeness. Otherwise some green offshoots would come out of roots and undermine seed sowing and threshing. 10 % of sowing must be performed within the blooming period. Sowing range for herbs is around 10 cm. The alfalfa is a plant that can be sowed for numerous times within a year. The actual yield would kick in following the second year. For instance, it can yield for 2 to 4 times in Eastern Anatolia, 4-5 times in Central Anatolia, 5 to 7 times in the Aegean Region and 7 to 10 times in the Mediterranean Region and Southeastern Anatolia. It is possible to reap 1-2 tons/da green herbaceous plant per sowing. It is a long-lasting and perennial herbaceous plant. It can survive for 30 years. Its economic life is 5 to 7 years long. The most important element following the sowing is herbaceous plant gathering and storage. Half of the dry substance and 70 % of the protein are on leaves following the sowing. The fodder must be gathered early in the morning (to minimize leaf losses). The herbaceous plant must be dried on tables or fences in regions where precipitation and humidity prevail. The alfalfa contains 70 to 80 % humidity at the time of sowing. The humidity rate must be reduced to 20-25 %. The sowing for a herbaceous plant must come to an end 4-6 months after the first frost case (in order to gather a spare nutrients in the storage). It would be ideal to produce

alfalfa seeds in regions where there is not much of a precipitation but it is sun–drenched and rich in day length and poor in relative humidity. The ideal spots would be Central Anatolia, Southeastern Anatolia, Transition regions and some parts of Eastern Anatolia. The alfalfa is a plant in which the anther and the pistil co-exist (hermaphrodite) and that is pollinated with an exotic pollen (allogam). Bombus, Megachile and Nomia pollinations and fertilizations are more common for exotic bees. The pollination rate is 80 % for exotic bees and 0,5 to 2 for honey bees. The first sowing must be on herbaceous plants and the second one on the seed since the humidity is high and insect pollinators are not active at the early stage in Central Anatolia and Transition Regions. Sprinkler irrigation decreases the population of bees. One must beware of sprinkler irrigation in periods of seed setting and blooming.

A mosaic virus (as a disease), a hypera variabilis (as a pest) and a dodder (as a weed) have an effective damage on the alfalfa.

These damages can be listed as the envelopment of lucerne by dodder, weed invasion, trampling of lucerne by animals and heavy-duty vehicles when the soil is humid or overgrazing, reduction in the amount of lime in soil, frequent sowing and sowing even below 10 cm, early and irregular sowing, grazing in a facility after sowing, pounding of irrigation water in certain areas, delay in irrigation or irregular irrigation and still ground water surfacing the plant root for a length of time.

8.2.2 Sainfoin (Onobrychis Lam.) Genus

A sainfoin genus contains 160 species. 52 sainfoin species are known to naturally grow in Turkey. The most cultivated one is *Onobrychis sativa* or *O. Viciaefolia*.

Sainfoin (*Onobrychis sativa* Lam.= *O. viciafolia* Scop.)

It is prevalently sowed in Central and Eastern Anatolia and Transition regions. It is highly cold and drought resistant. It rapidly grows in barren and calcareous soil where no other plant would ever grow. It is known as the king of forage crops thanks to its productivity under harsh conditions. It is much more productive in non-irrigated lands than the alfalfa is. It cannot, however, match an alfalfa in terms of productivity in irrigable lands. The number of sowing and herbaceous plant productivity for a sainfoin is less than an alfalfa since the sainfoin slowly grows following the sowing. Dairy cattle would be more productive in the quality of milk and butter when they feed on sainfoin plants. The sainfoin roots can go deep into the soil amounting to 8 to 10 cm in arid areas. It is capable to raise strong and branched roots, water and nutrients in substratum to the surface. It would, therefore, be opted for other forage crops in arid areas. Grains planted following a sainfoin would yield a huge increase in productivity. The sainfoin is equivalent to an alfalfa in terms of nutrient content and tastiness and superior to the alfalfa in terms of some certain qualities. The amount of substance called lignin negatively affecting digestion is less in a sainfoin than in an alfalfa. A sainfoin would not give rise to a inflation in ruminants. It is one of the prominent forage crops in terms of resistance to drought and cold. A sainfoin is resistant to hypera variabilis. It can be directly

consumed as animal feeding stuffs for the reason that it contains 36 % crude protein in its seeds. A sainfoin is a very rich source for nectars and pollens (Figure 8.2).

Figure 8.2 Sainfoin (left) and sainfoin fruit (enlarged photo, right)

It is not picky in terms of soil. It generally favors slightly-calcareous lands. It grows much better in soil lacking in phosphorus. The sainfoin is one of most ideal forage crops to be sowed in extraordinary areas. It bountifully yields in soil with a high amount of lime and water level at depth. It does not fully blend in acid and wet soil. It is quite resistant to salinity. It is drought-resistant thanks to its deep and strong roots. It can grow in sandy soil as well. It yields well enough where other forage legumes fail to do so due to the drought. Its productivity is rather low where the annual precipitation is below 350-400 mm. It becomes sparse in regions with high amount of precipitation or in irrigated lands due to flora, root and root collar diseases. Its seedlings are not that cold-resistant. Ripe plants are much more cold-resistant. It can be cultivated even in Montana and other cold regions in Canada.

A special attention must be paid to seed bed preparation for a sainfoin just like for other forage legumes. It does not require much care since their seeds are bulky. It has got to be a well-prepared seed bed cleaned of weeds since the sainfoin grows very slowly in the first year and the weeds would do harm seedlings of the sainfoin if the seed bed is not thoroughly cleaned. The sainfoin seeds are sowed in two ways:

- Bloomy
- Germinal

In spite of the fact that a sainfoin has some bulky seeds, it would be no good to plant it into the deep. Studies have suggested that the deeper the planting is for a sainfoin, the less chance it has to rise to the ground. The planting depth, that is why, must not exceed 1,5-2 cm unlike its bulky seeds. Young seedlings cannot ideally grow in lands with too much weed due to the fact that they slowly grow in the year of sowing. One must attach importance to the preparation of lands where the sainfoin will be planted. It can be easily cultivated by standard drills. It is easy to configure the drill since the amount of seeds to be cultivated in

decare is too much. Interrows must be around 20 to 40 cm for sainfoin planting under barren conditions in Turkey. The range for interrows can be extended in highly arid areas. 5-6 kg/da crude and fresh seed would be enough for sainfoin sowing. It is suggested that the number of seedlings goes higher for sainfoin sowing in case the amount of seeds per unit is too much but an increase in the size of the plant and the productivity of the herbaceous plant is out of question. The sainfoin can be sowed in barren and irrigated areas with a view to boosting the seed production for sainfoins. Many researchers recommend that the sainfoins be cultivated with interrows at 60 to 100 cm to boost the production.

Sainfoin seedlings are not that cold-resistant. It suffers from harsh and cold climates in autumn sowings with a potentially harsher winter ahead. It would be fine in winters following the sowing. It can be cultivated in October-November in coastal regions with warm winters.

It must be cultivated in springs in Central and Eastern Anatolia where the winters are harsh. The sainfoin must be cultivated as early as possible and right following the frosts in spring. The farmers benefit from composite seeds in sowing. Those domestic species in the characteristics of non-rehabilitated population are proved to be more productive than the foreign ones. The sainfoin seed used in cultivation is actually a crusty fruit. Shelled seeds inseminate easily, early and at a higher rate. The sainfoin is cultivated as a fruit all over the world since the shelling procedure is challenging. Cultivation as a fruit in arid and semi-arid areas reduces the risk of *Alatav*. Fresh sainfoin seeds are soiled yellow. Its color thickens when it goes stale and turns into brown. The sainfoin loses its energy of insemination at a short notice such as 3 or 4 years. One must make sure that the sainfoin seeds are fresh. The sainfoin seeds must be inoculated with effective bacteria cultures prior to the sowing. For instance, a study in Canada has resulted in high productivity for herbaceous plants at a rate of 28 to 33 % for inoculated sainfoin lots.

The sainfoin is not a kind of plant adapting well to fertilization in barren conditions. 1-3 kg/da N would be enough in the year of sowing. It is not affected by lack of phosphorus. 5-10 kg/da P_2O_5 is enough for each year. The sainfoin is much more productive in lands lacking in phosphorus than an alfalfa and a red alfalfa.

Weeds must be hoed and cleaned out in the first year for sowing on small lands. The interrows in large lands can be cleaned out by cultivators or a mowing machine. The sainfoin cannot match weeds. The weeds, that is why, must be thoroughly cleaned out. The amount of weeds goes lower and lower following the 2nd year. The amount of weeds goes high again due to the sparsity of the sainfoin following the 3rd year.

The productivity in herbaceous plants or seeds would be lower than following years since the plants cannot simply grow under arid conditions in the first year of sowing. The actual productivity of plants manifests itself following the 2nd year. Stems out of petals grow taller at a rate of 60-100 cm. Just like other legumes, the sainfoin is more productive in fodders as their growth stages progress and the protein rate regresses. The most ideal time of sowing

for a sainfoin is 10-100 % blooming period. It must be sowed at 10 % blooming stage in barren conditions and at full blooming stage in irrigated areas.

The sainfoin yields 1 sowing each year in barren conditions. One can cultivate 1 ton/da wet herbaceous plant, 250-500 kg/da fodder. If it is rainy all year along in arid areas, then it is possible to cultivate 2 times. The fodder productivity in humid areas is 500-1000 kg/da. The irrigated areas allows only for 2 or 3 harvests as a total of 1-2,5 ton/da fodder at most can be cultivated in irrigated areas. A sainfoin can survive for 3-4 years in barren conditions. The most productive terms are the 2nd and the 3rd year. It becomes sparse following the fourth year. The sainfoin, therefore, must be cultivated at the end of the 3rd year and replaced by at first wheat and barley. The sainfoin stems are thicker and cruder than an alfalfa. It has less leaves than an alfalfa. It is, therefore, considered tasteless and low in nutritional value. The sainfoin herb is, however, delicious and nutritious for all animal species. The amount of crude protein in a sainfoin is lower than in an alfalfa sowed in the same period. The amount of total digestible nutrients is higher. The sainfoin is a plant of cross-pollination. Honey bees play a major role in the pollination of sainfoin flowers. The sainfoin flowers are tempting for honey bees as well. It is a sainfoin that the honey bees initially perch on in Eastern Anatolia of Turkey. The lands allocated for production of sainfoin seeds boost the productivity of honey as placing bee hives around at the blooming stage increases the pollination rate.

Most of the fruits are yielded when they turn into brown. A delay in sowing leads to abscission and low productivity. The essential seed product is cultivated following the second year. The seed productivity is pretty high. One can cultivate 30-60 kg/da seed in barren conditions and 200 kg/da in irrigated areas.

Disease and pests

- *Sphenoptera carcieli*
- *Bembecia scopigera*

Larvae of these pests penetrate into the root collar and destruct the nucleus of the root leading to death of plants the root of which is damaged. A sainfoin, able to normally survive for 8 to 20 years, cannot survive more than 3-4 years in Turkey due to this pest.

8.2.3 Vetch (Vicia) Genus

This genus has approximately 150 species. 59 vetch species reportedly grow in their habitats all over Turkey. As an annual forage legume, it has a 234 thousand ha cultivation area according to a report dated back to 2002. The most common genus of a vetch for agriculture both in the world and Turkey is the common vetch (*Vicia sativa* L.). The Hungarian Vetch has rapidly become widespread due to its tolerance to cold and too much humidity in the soil and its characteristic of less lodging. The best cold-resistant vetches can be listed as narbon vetches and common vetches (Figure 8.3). A hairy vetch is drought-tolerant as well. Vetches are cultivated for herbaceous plants in coastal regions and for seed production

in interior regions. Vetches are cultivated for green grass, fodders, grain and silage. It is the most cultivated forage legume for reducing fallow lands. Vetch species can be cultivated in crop rotation, grain-fallow crop rotation and as a catch-crop (between two main crops). The herbaceous plant is cultivated at a time when sub-fruits (beans) take their actual physical shape. The seed is sowed when these sub-beans turn into brown. The lands to cultivate vetches on are deeply plowed with a regular or disc harrow. The soil cultivation is performed in coastal regions in accordance with land conditions after sowing the main product.

Figure 8.3 Common vetch and its seed (top left), Hairy vetch and its seed (top right), Hungarian vetch and its seed (bottom left), Narbon vetch and its feed (bottom right).

Common vetch (*Vicia sativa* L.)

It is recommended for common vetches that the interrows be at 15-40 cm, the cultivation be at 10-12 kg/da and the interrows in grain production be wider as 8-19 kg seed would be enough per decare. It is not a picky plant in terms of soil requirements. It is rich in nutrients and it substantially yields in lands with a decent drainage. It grows well in mildly clayey and sufficiently calcareous soil. Too much lime in the soil, however, would negatively affect the growth. Sandy soil is ideal for vetch agriculture with a proper fertilization. It can be slightly tolerant of acidic conditions. In Turkey, there are some commercially available species called such as Karaelci, Kubilay 82, Urem 79 and so on.

Hairy Vetch (*Vicia villosa* Crantz.): It is pretty tolerant of winter and drought. It favors sandy and slightly light soil even though it can be cultivated in almost any kind of soil. It is salinity-resistant. Turkey has hairy vetches called Efes 79, Menemen 79, Munzur 98. The

interrows must be at 30-40 cm in barren conditions for herbaceous plants and seeds. The cultivation must be at 4-8 kg/da.

Hungarian Vetch (*Vicia pannonica* Roth.): It is a vetch species that is water and drought resistant. Its tolerance to winter is better than the common vetch but worse than the hairy vetch. It does not suffer from usual winter seasons in Turkey. It is not picky when it comes to the soil. It would grow even better, unlike other vetch genuses, in clayey, wet and calcareous soil. The productivity is less in light soils than the hairy one but much more in mildly heavy and calcareous soils. It can be cultivated on its own since it does not lodge as much as the Hungarian, common and hairy vetches do. It yields in combined sowing as well. 8-12 kg seed is cultivated in combined sowing. The combination is moduled as 2/3 vetch and 1/3 grain per seed. 8-0 kg seed is enough per decare in grain production as interrows must be at 30-40 cm. The interrows for herbaceous plants must be at 15-20 cm. The grain productivity of the Hungarian vetch is 70-200 kg per decare. One can wait until the fruits reach 75-90 % ripeness for seed sowing unlike the common and hairy vetches since the Hungarian vetch is a genus that does not easily shed its seeds.

Narbon vetch (*Vicia narbonensis* L.): It is the forage that is winter- and drought-resistant. It looks like beans by all appearances. It is eaten by animals as a green grass. Its grains are crusted and used in animal feeding. The cultivation can be performed by regular drills in autumn. The interrows must be at 15-20 cm in barren and irrigated areas and 30-40 cm for seeds. The cultivation ranges from 15 to 20 kg/da. It is cultivated as a crude vetch due to its vertical growth. It does not shed its seeds. The seed sowing must be performed after the plant is completely dry.

8.2.4 Maize (Zea mays L.)

It is a plant extensively cultivated for grain production. It ranks third following wheat and paddy in terms of prominence. It grows quite well where the average temperature is around 30-35°C. A 15-20°C decrease in the temperature hampers its growth. There are species the growth season of which is 150-200 days well as early species that can ripe in compliance with Product II within 90-125 days. The maize is not drought-tolerant. A relative humidity over 60 % is a requisite for a proper maize agriculture. It would be the best for high productivity if the amount of precipitation does not drop down below 200 mm within the growth period and even exceed 400 mm. Otherwise this need for precipitation must be met through irrigation. The maize is picky when it comes to the soil. A decent maize soil must be rich in plant nutrients and appropriate for drainage. It would not yield much in excessively sandy and clayey lands.

The lands to be cultivated with maize are deeply plowed in autumn and by disc harrow or a regular harrow in springs and the maize is ultimately crumbled. The land is plowed directly in case the lands to be cultivated with Product II are wet following the sowing of the primary product but indirectly by a plough following the irrigation. The seed bed is prepared with a disc harrow or a regular harrow. Maize seeds inseminate very slowly below 10°C. As a

principle, the maize cultivation begins when the soil temperature hits at least 10-12°C. This would be usually early April in the Mediterranean Region and May in Central Anatolia and Transition Regions. 2-3 kg/da seed would be enough for cultivation. The interrows must be at 60-80 cm and ideally at 70 cm. The row distance is about 20-30 cm. The sparsity process must be under way when the maize has 4-5 leaves and be completed within the 3 first weeks following rising to the ground.

15-20 kg/da N and 8-10 kg P_2O_5 would be generally enough for maize silage. All of the phosphorous fertilizer must be added at the time of sowing. The half of the nitrogen fertilizer must be added at the time of sowing and the other half when plants are as tall as 40-50 cm. The irrigation is the most crucial factor having an impact on maize productivity. The most sensitive period of maize to water is the period between a week prior to tassel fringe of the top of the plant and the first blooming time.

The irrigation in the Central Anatolian Region is performed

- when the plants grow 40-45 cm tall,
- at the stage of tassel fringe of the top of the plant,
- at the corncob growth stage,
- and at the sap formation stage.

If water is not sufficient, thrice irrigation is likely to be enough,

- at the stage of tassel fringe of the top of the plant,
- at the corncob growth stage,
- at the sap formation stage or twice irrigation might as well be enough
- at the stage of tassel fringe of the top of the plant and
- at the sap formation stage.

The Irrigation in Central Anatolia

The irrigation method for maize: Sprinkler irrigation or furrow irrigation are two options. Sprinkler irrigation is likely to be productive when plants are short. The furrow irrigation, however, is a favorite for following terms.

Maize silage

The maize is an exceptional plant of silage. It contains plenty of carbohydrate (sugar) in cobs and stems. The ideal period for maize silage production is generally recommended to be the sap formation stage when it must be sowed. The digestion rate of protein and dry substance is pretty high at this stage. It has been recently sowed at *early dough* stages (2-3 weeks before it reaches the weight of a dry grain in the corncob) as well. *If the maize is harvested at the early stage, it rises to the ground since leakage is of vital in the silo. If the maze*

is harvested at late stages, then the silo would contain high amount of oxygen since there would be no tightening. Aerobic respiration goes on for a long time. Sowing, chopping and loading procedures are performed by silage machines for maize silage production. Green matter yields for the maize can rise to 5-6 tons/da and even to 10 tons/da at times. 50 % of the total green matter yield for the maize and 70 % of the nutritive value reportedly result from the cob. The large and lush grained species, therefore, are more practical for silage.

Green plant and fodder production

Maize silage can be cultivated at times and then chopped and used as a green plant for animals. The maize must be cultivated at an amount that the animals can consume in a few hours. Otherwise the green fodder is heated and the taste would go sour. Sowed as a fodder in some regions of Turkey, the maize is dried and stored in winter as animal feeding stuff. The maize, due to its thick stems and leaves, hardly dries up and the quality of a fodder would be low. The maize, that is why, must not be stored as a dried grain.

8.3 Production of Feeding Silage

Silage is a fodder that is obtained as a result of shredding and then tightening of a fresh and water-containing vegetative material and storing it under anaerobic conditions by forming lactic acid (acidophilus milk).

The benefits of silage can be listed as follows:

- It benefits from the labor force.
- It is ideal for lands having difficulty in desiccation.
- It minimizes feeding and animal product losses.
- It meets the need for high-quality feed when green fodder is not available.
- Storage of fodder by fermentation prevents losses in nutrients.
- The preservation of fresh and soft characteristics of the fodders as a result of fermentation and their lovely smell make them favored and consumed by animals.
- Some of the plant species with a detrimental effect when consumed fresh lose this quality following the silage.
- It prevents dispersion of weeds since the seeds lose their insemination capabilities following the fermentation.
- Silage enables to store more feeding stuff per unit area. 1 ton fodder requires 14 m3 as the same amount of fodder would be enough for siloing a volume of 1,5 m3.
- Silage is more delicious, appetizing, aqueous and nutritious than other fodders.
- Compared to other fodders, its cost is usually lower and that is why it could cut the animal product costs.
- Silage is an easily-digestible and highly-nutritious fodder.

- Silage can be made of any kind of fodder, forage and byproducts of food industry that animals feed on.
- Silage has no hazard of combustion or getting burned like hay does.

A facility where the feeding material silage is sowed by a silage machine and stored is called a silage storage or briefly, a silo. 4 most common silo types are:

- Ground plastic bag silos
- Cement storage or prefabricated silos
- Tower silos
- Concrete stave silos

These are the elements for a productive silage making:

- Sowing the product at the ideal stage
- Silage making of the product in the best substance of humidity
- Shredding at in a reasonable size
- Silo filling without a moment to spare
- Tightening
- Covering the silage in a way to keep it airtight
- Extracting the silage in slices and without injuring the main mass at an amount enough for daily need of feeding.

These are the terms to be followed in silo filling:

- The product to be subject to silage must be clean and high quality
- The filling procedure must be completed within a couple of days.
- Tightening and making it airtight
- As soon as the filling and tightening procedures are completed, one must spread the cover of silage and put some soil on it and apply a regular pressure.

The materials used in silage making can be divided into 3 groups in terms of silage simplicity:

- Easily-ensilaged: Whole maize, sunflower, green parts of Jerusalem artichoke, cabbage leave feeders, sugar beet leaves, fodder beet leaves, species of green proso millet.
- Moderately-ensilaged: Whole rye, bean, legume mixtures, lupin species, trefoil mixtures, green mustard, sunflower (fresh), meadow grass.
- Hardly-ensilaged: Fresh pasture grass, alfalfa, sweet lupin, trefoils (prior to blooming), Vetch and pea species.

It is of crucial importance to harvest the plant silage at an adequate time.

- The product must be harvested at a time when it contains the highest amount of nutrients for animals.

- It is a period when sweet substances are maximum for silage making.
- It is an ideal period for shredding and tightening due to the specific characteristics of the plant.

Table 8.1 Best harvest time for some plants

Plant Species	Ideal Harvest Time
Maize silage	When the grains are doughy
Poaceae	At the Sap formation Time
Meadow grass	Prior to budding
Alfalfa	Blooming Start and Mid-Blooming
Vetch	Until full blooming
Oat-Vetch mixture	At the start of blooming for a vetch
Rapeseed	When 10 % of the plants is flowered
Sorghum	When leaves discolor
Sorghum-Sudan grass	When the plant is as tall as 90-120 cm

Legumes containing high amount of water are left on the land after harvesting the plants just like the whole wheat in a way that would not exceed 24 hours so that their water content can be reduced. This procedure is called de-colorization.

Benefits of De-colorization:

- It prevents detrimental activities of microorganism that can survive under humid conditions.
- It prevents losses in nutrients resulting from water leaking into a silo.
- It leads to a proportional increase in the plant content necessary for silage.
- It reduces bearing weight of silage.
- It leads to an increase in silage consumption of animals.

The silage consumption depends on size of the material and its adaptation to the soil. The consumption of silage chopped in the course of harvest is 50 % more than the non-chopped ones.

A proper chopping procedure would

- provide a resource for silage by releasing sweet substances of plant cells.
- facilitate tightening of the product and making it airtight.

- provide a biotope for bacteria making it possible for silage making.
- facilitate unloading of silage from the silo.
- enable the tripe of an animal feeding on silage to function in a healthier fashion.

Table 8.2 Appropriate shredding size in some of the plant silage

Plant Species	Shredding Size
Maize Silage	1-1,5 cm
Alfalfa	0,5-1 cm
Poaceae	0,5-1 cm
Meadow grass	0,5-1 cm
Sorghum	1-2 cm

Table 8.3 Areas of use for various additives

Additives	For what purpose are they used?
Sweet substances (Molasses, sugar beet, beet pulp ground grains)	Facilitating silage making in products poor in sugar content like legumes and rich in protein.
Desiccants (Degraded straw, dried sugar beet pulp, ground grains)	Preventing the detrimental effect of too much water rich in humidity just like brewer's grains.
Substances giving rise to an increase in water content (Water, whey)	Facilitating silage making in products such as maize the sowing time of which is belated.
Food Stuff (Ground grains, molasses, whey)	Increasing the nutrient content of silage.
Salt	Minimizing undesired microorganism activities in products poor in sugar content like legumes and rich in protein.

Table 8.4 Amount of some additives to be added to silage

Name of the Additive	The Amount to be Added to 1 Tone Silage
Molasses (Dissolving)	10 - 30 kg
Feeding Sugar	5 - 15 kg
Wheat Barley Folded	40 - 70 kg
Dried Sugar Beet Pulp	20 - 50 kg
Formic Acid (Diluting)	2,2 liter
Lactic Acid	10 kg
Salt	10 - 30 kg
Other Commercial Additives	According to definitions

Table 8.5 Some common problems in silage and probable causes of these problems

Indications	Probable Cause
Heating in Silage (More than 50 °C)	A delay in loading the product in silage, air penetration into silage, extremely low humidity, a product the harvest of which is late, huge shredding, poor distribution of the product into silage, poor tightening, a delay in feeding on the silage opened.
Blackened grains in maize silage. Very dark silage or tobacco smell.	Extreme heating results from too much air in the silage mass. Excessive humidity, huge shredding or poor tightening.
Mouldy silage	Ensilage of a product infected with mould, slow filling of the product into the silage, huge degradation, extremely low humidity and poor tightening, a delay in feeding on the silage opened.
Smell of Spoiled Milk	Domination of bacteria producing butter acid. High humidity, little amount of sugar in the product, insufficient milk acid bacteria.
Smell of Vinegar	Domination of bacteria producing vinegar acid. Rich in humidity, a product containing little amount of sugar, and insufficient milk acid bacteria.
Smell of Alcohol	Domination of yeasts. Poor in humidity, poor tightening, a delay in feeding on the silage opened.
Water leakage	A product with an extreme amount of humidity, blunt blades of the silage machine and excessive tightening.
That animals do not feed on silage	Plenty of causes. Deterioration of the silage due to abovementioned causes, too wet or too dry silage, an extremely ripe product, infecting with mould poisonous seeds or nitrates.

The Rules to Follow When Buying and Using Silage Additives

- It must not be dangerous for the health of staff.
- It must not have any negative impact on animal productivity.
- It must be equally distributed to all parts of feeding stuff.
- It must minimize the deterioration in the silage and boost the resistance of the silage.
- It must be easy to apply and not require a high-level of information.
- There must be a technical information assistance regarding to the additive.

Opening of Silo

- A silo must complete its ripening process for opening.
- The ripening duration is at least 45 days. After then, it can be opened and served for animals to feed on.
- Opening of a Silo 2 months later would be the safest way of all.
- The color of the silo opened must be olive green and its smell must be like pickle.
- Silo feeding stuff must never fed for animals if it is smelly, moldy and dark Brown.

Daily Amount of Silage for Animals

- Dairy cows: 10-35 kg
- Fattening cows: 10-35 kg
- Calf and heifer: 6-8 kg

8.4 Conclusions

- Products must be reaped at ideal stages and immediately ensilaged before they lose their nutrition value as a result of wetting and leaf loss.
- Feeding stuffs must be decolorized for a while and then crushed and filled into the silage.
- The filled silo must be tightened and airtight.
- Silage must be extracted at an amount that would be enough for daily needs of animals.

References

- Acar, Z., Ayan, I., 2004. Yem Bitkileri Kulturu. Ondokuz Mayıs Universitesi Ziraat Fakultesi. Ders Kitabi No: 2 (2. Baskı), Samsun.
- Acıkgoz, E. 2001. Yem Bitkileri, Uludağ Universitesi Guclendirme Vakfi Yayin No: 182, Vipas AS Yayin No: 58, Bursa.
- Anonim, 1999. Cayır-Mera Amenajmani ve Islahi. T.C. Tarım ve Koyisleri Bakanligi Tarimsal Uretim ve Gelistirme Genel Mudurluğu, Ankara.

- Avcıoğlu, R., R. Hatipoğlu ve Y. Karadağ. 2009. Yembitkileri. Genel Bölüm. Tarım ve Köyişleri Bakanlığı, Tarımsal Üretim ve Geliştirme Genel Müdürlüğü, Cilt 1, İzmir, 2009.
- Avcıoğlu, R., R. Hatipoğlu ve Y. Karadağ. 2009. Yembitkileri. Baklagil Yembitkileri. Tarım ve Köyişleri Bakanlığı, Tarımsal Üretim ve Geliştirme Genel Müdürlüğü, Cilt II, İzmir, 2009.
- Avcıoğlu, R., R. Hatipoğlu ve Y. Karadağ. 2009. Yembitkileri. Buğdaygil ve Diğer Familyalardan Yembitkileri. Tarım ve Köyişleri Bakanlığı, Tarımsal Üretim ve Geliştirme Genel Müdürlüğü
- Elci, S., Acıkgoz, E. Baklagil (Leguminosae) ve Bugdaygil (Gramineae) Yem Bitkileri Tanitma Kilavuzu. Tarim Isletmeleri Genel Mudurluğu, Ankara.
- Er, C., Basalma,D., Ekiz,H. Ve Sancak, C. 2011. Tarla Bitkileri II, T.C. Anadolu Universitesi Yayini No:2254, Acıkogretim Fakültesi Yayini No: 1251, 235p. Eskisehir.
- Genckan, M.S. 1992. Yem Bitkileri Tarimi. Ege Universitesi Ziraat Fakultesi Yayinlari, No: 467 (2. Baski), Bornova, Izmir.
- Gulcan, H., Anlarsal, A.E., 1992. Yem Bitkileri II (Baklagil Yem Bitkileri). Cukurova Universitesi Ziraat Fakultesi Genel Yayin No: 5, Ders Kitapları Yayin No: 3, Adana.
- Maier, Karsten, Saglamtimur, T., Kahnt, G. 1990. Plits. Annuelle Wildleguminosen Der Mediterranklimatischen Cukurova (Türkei) Adana.
- Manga, I., Acar, Z., Ayan, I. 1999. Bugdaygil Yem Bitkileri. Ondokuz Mayıs Universitesi, Ziraat Fakültesi, Ders Kitabi No: 6 (2. Baski), Samsun.
- Manga, I., Acar, Z., Ayan, I. 2003. Baklagil Yem Bitkileri. Ondokuz Mayıs Universitesi, Ziraat Fakultesi, Ders Kitabi No: 7 (2. Baski), Samsun.
- Saglamtimur, T., Tansi, V., Baytekin, H. 1989. Yem Bitkileri Yetistirme. Cukurova Universitesi, Ziraat Fakultesi, Ders Kitabi, No: 74, Adana.
- Soya, H., Avcioglu, R., Geren, H. 1997. Yem Bitkileri. Hasad Yayincilik Ltd. Sti. Istanbul.
- Tosun, F. 1974. Baklagil ve Bugdaygil Yem Bitkileri Kulturu. Ataturk Universitesi Yayinlari No: 242, Ziraat Fakultesi Yayinlari No: 123, Ders Kitapları Serisi No: 8, Erzurum.

9. CHAPTER

Dairy Cattle Barns[1]

Prof. Dr. Numan AKMAN

9.1 Introduction

Dairy cattle farmers have different size and type of barns and barn elements depending on the size of the herd, breed of cattle, time of when they start raising cattle, place of the farm, etc. It is possible to make significant modifications on the structure of the farm in due course, the barns in particular.

Turkey possesses a wide range in terms of barn variety. For instance, it is possible for one to come across with caves used as barns or 2-3 storey structures built at a substantial cost. Even the barns, which look much alike, will differentiate from one another at a careful glance regarding different ceiling height, surface adjustments, manger type and shape. This wide diversity, most of which is not caused by the size of farms, the level of mechanization or the climate, indicates that there is quite an alternative understanding of evaluating functions of the barns in Turkey. Indeed, not only the expectations from a barn but also the type and elements of the barn may present significant differences in the same region, same province, or even in the same village. Especially in recent years, when some of herd owners with the same size of herds who try to produce with the same breed at the same productivity levels in the same settlement are producing in closed barns, others produce in half open, or even open barns.

9.2 Primary Requirements for Dairy Cattle Barns

The primary requirements for the barns in a dairy cattle farm are a comfortable environment for animals, an appropriate and safe workplace for employees, and to create the opportunity for the preservation of the quality primary product, namely the milk. . For example a comfortable environment for a cow in a farm accounts to having an appropriate surface to walk and lie on in a setting with clean and dry and air without drafts, having enough space to comfortably move in, breathing plenty of quality air, having easy access to water and feed, being milked with appropriate devices and equipment. In order to carry out these functions, barns must have certain characteristics regardless of their type or format. Some of those characteristics, which come to mind first are listed as follows. Barns;

1. have units arranged for both at different age group (calf, heifer, cow, etc.), and for animals with different status (in the dry, lactating, sick, etc.)
2. create appropriate environment for cattle.

[1] The section was prepared mainly using the book "Practical Cattle Breeding" by Prof. Dr.Numan Akman.

3. have an environment to promote the performance and productivity of employees.
4. provide safety of people and animals.
5. be built in such a way to provide easy access of animals to water and feed.
6. have the required equipment to provide easy and clean milking.
7. provide opportunity for easy removal of manure.
8. make it possible to easily prepare and distribute the feed.
9. have required elements to facilitate catching the animals, separating them from the herd, weighing them, vaccinating them, etc.
10. be as low cost as possible with the least possible amount of labor required.
11. have the required hardware and equipment to reduce the disturbance and the damage that the farm will inflict on the environment in time to the least amount possible and these concerns should be taken into account while selecting the area that the farm is built.
12. fulfill the conditions that are set by the legal regulations on farms and barns.

9.3 Primary Elements of Farms

In a dairy cattle farm, there are various numbers of animals of different age and status depending on the size and management of the herd. The definitions and number of these are presented in detail in the section 13.

In a farm which is big enough to house animals from different age groups and animals of different status from the same age group, have a milking parlor, a waiting area for milking, calving and treatment area, milk collection center, bureau, machinery room, a lunch and resting area for workers and management units in addition to the sections for the cow barns (during lactating and dry period),calves barns, veal and heifer barns and calving area. Also, manure channels, manure and feed storages, feed preparation units and routes are to be counted among the elements of the farm.

The sizes of the units in a farm are directly related to the number of animals in the farm. Of course, the decisions and the style of the management also affect the number of animals. For example the number of assets in a farm, which sells the calves right after birth, and a farm, which keeps them, cannot be the same. Similarly a farm, which prefers to store the manure for six months and a farm stores the manure for 4 months, will need different sizes of manure storages, respectively. The basic requirements of a farm including the areas to be prepared for different age groups are determined by these choices made and the composition of the herd taken into account.

9.4 Composition of the Herd

When planning for a dairy cattle farm, it is required to know the number of animals from different age groups, in other words the age structure of the herd. Thereby, both the areas to be allocated for the groups and annual needs of the farm and production can be calculated almost accurately. How to make these calculations is presented in the relevant section (Section 13) in detail. Here however, the number of male and female animals in different age groups

Table 9.1 The age composition of the herd with 100 cows

Age groups		Number of Animals
FEMALE	28-30 Moths old Heifer	-
	25-27 Moths old Heifer	-
	19-24 Moths old Heifer	21
	13-18 Moths old Heifer	21
	7-12 Months old heifer	22
	4-6 Months old calf	12
	0-3 Months old calf	13
MALE	13-18 Months old bull	21
	7-12 Months old young bull	22
	4-6 Months old male calf	12
	0-3 Months old male calf	13
Cow		100
Total		**257**

in a herd of 100 animals is presented with a 24 months average age for the first calving, culling rate of 25%, survival rate between 0-24 months 86%. As it can be understood from the table, approximately there should be 20 head 19-24 months old heifers, 23head 13-18 months old female animals and 23 head 7-13 months old male and 23 head 7-13 months old female animals, 12 head 4-6 months old male calves and 12 head female calves and 13 head 0-3 months old male calves and 14 head 0-3 months old female calves in a farm with a herd of 100 cows. In a farm with a 27 months of first calving age, there should be an additional 10 head 25-27 months old pregnant heifers added to the group. If the first calving age is 30 months, there should be approximately 10 28-30 months old pregnant heifers. In brief, in a herd with a total cow number of 100, the number of animals can be calculated as 262, 272, 282 respectively when the first calving age is 24, 27 or 30 months. If a herd composition for a different number of cows needs to be calculated, the appropriate coefficient from the table 9.1 can be drawn to multiply and then the figure can be divided to 100.

9.5 Environment for Cattle

Among the main functions of a barn are to protect animals from unfavorable environmental conditions and to provide support for quality and low cost production. Therefore, before conducting any task about the barns, ideal environment for the cattle should be investigated and known, and which climatic conditions are unfavorable should be pointed out. Otherwise, those who do not have sufficient amount of information on this topic may try to come to a conclusion about the proper climatological condition for cattle by basing their comparison on the requirement of people. In other words, the urges of cattle, incapable of constructing a shelter for themselves in all periods of history are considered alike to those of men's who managed to dwell in shelters in one way or another. The outcome of this approach is extremely expensive, incommodious structures, which have no benefit to animals and even do some harm to them. Hence, the proof for the dominance of this understanding is observed through the fact that similar precautions are taken to protect cattle

from climatic conditions, which are considered to be unfavorable. However, although not quickly, this understanding started to lose its impact. Indeed different structures are started to be built in the same region for different purposes. Training activities and new investments have a share in this transformation. However, it is not possible to indicate that this positive transformation can encompass the old structures and the whole country. Moreover, the barns, which are constructed by taking another as model, can embody both the mistakes of the original structure and the new one built altogether. Therefore those who would like to make modifications in their existing structures should be informed about the environmental climatic urges and needs of cattle first.

The first elements, which come to mind when speaking of climatic or environmental conditions impacting cattle, are temperature, humidity and wind velocity. In the following section, there are brief descriptions on these elements and some values for different age groups will be provided below.

Temperature

The interval of temperature degrees in which the cattle can preserve their body heat without difficulty is referred to as "the most appropriate temperature interval" or "the comfort zone" or "thermo neutral zone". The minimum and maximum temperature threshold for this interval for cows is approximately 4° Celsius and 15° Celsius, respectively. However, cows may continue their productivity without a significant decrease in a larger interval outside these temperature values thanks to some characteristics that they possess. The interval, which is referred to as "appropriate temperature interval", has a minimum threshold of -5° Celsius and a maximum threshold of +25° Celsius. The temperature values at which the cattle start to fail in compensating the decrease in their productivity and be damaged is called "lower critical temperature" for the lower one and "upper critical temperature" for the upper one, respectively. The temperature values, which can vary depending on factors like humidity rate, wind velocity in addition to the age and nutrition level of animals, etc. has a minimum threshold of -18° Celsius, and maximum threshold +27° Celsius (Figure 9.1).

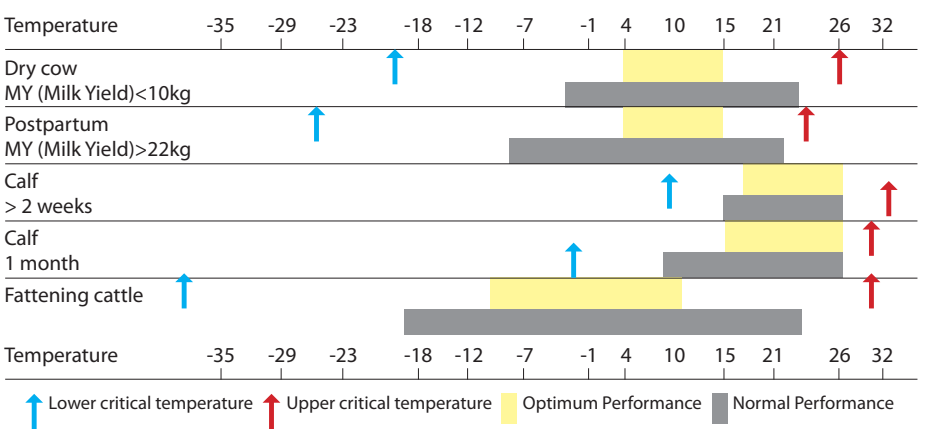

Figure 9.1 Optimum temperature intervals for cattle and lower and upper critical values[2]

[2] Prepared making use of Buclin et all. 1992. Physical facilities for warm climates. Large Dairy Herd Management, ISBN 0-9634491-0-9.

The fact that cattle have spread almost all parts of the world is an indication that cattle can dwell and offer productivity under different circumstances. Therefore, when considering heat and temperature appropriate temperature interval should be focused on rather than the most appropriate temperature interval, which provides the optimum performance of productivity. The optimum and normal performance values and lower and upper critical values for cattle from different age groups have been presented in Figure 9.1. As it can be understood from the figure, the values, which are evaluated, differ in accordance with the age and status of the cattle. For example both the comfort interval and lower critical values are considerably different for cows from a dairy cattle herd and livestock animals. However, it can be observed that the variation is not very high when the upper critical temperature values are compared. In other words, regardless of their status, it will not create a comfortable environment for cattle if the temperature exceeds 25-30° Celsius. .

When we consider the upper and lower temperature threshold of appropriate temperature intervals within the context of Turkey, it can be argued that cattle should be protected against heat rather than being protected against cold. This issue becomes more important especially in Turkey where high humidity accompanies high temperature. Because if the humidity rate is also high, cattle cannot exert the heat produced in their bodies in high temperatures (over 25°C). They reduce feed consumption to avoid temperature rise. This, in turn, causes directly the milk yield to drop. The same incident is also seen in very hot and humid barns.

C°	Relative Humidity													
	30	35	40	45	50	55	60	65	70	75	80	85	90	95
20	64	64	65	65	65	66	66	66	66	67	67	67	67	68
21	65	66	66	66	67	67	67	68	68	68	69	69	69	69
22	66	67	67	68	68	68	69	69	69	70	70	70	71	71
23	68	68	68	69	69	70	70	70	71	71	72	72	73	73
24	69	69	70	70	71	71	71	72	72	73	73	74	74	75
25	70	70	71	71	72	72	73	73	74	74	75	75	76	76
26	71	71	72	73	73	74	74	75	75	76	77	77	78	78
27	72	73	73	74	74	75	76	76	77	78	78	79	79	80
28	73	74	74	75	76	76	77	78	78	79	80	80	81	82
29	74	75	76	76	77	78	78	79	80	81	81	82	83	83
30	75	76	77	78	78	79	80	81	81	82	83	84	84	85
31	76	77	78	79	80	80	81	82	83	84	85	85	86	87
32	77	78	79	80	81	82	83	84	84	85	86	87	88	89
33	79	79	80	81	82	83	84	85	86	87	88	89	90	90
34	80	81	82	83	84	84	85	86	87	88	89	90	91	92
35	81	82	83	84	85	86	87	88	89	90	91	92	93	94
36	82	83	84	85	86	87	88	89	90	91	93	94	95	96
37	83	84	85	86	87	89	90	91	92	93	94	95	96	97
38	84	85	86	88	89	90	91	92	93	95	96	97	98	99
39	85	86	88	89	90	91	92	94	95	96	97	99		
40	86	87	89	90	91	93	94	95	96	98	99			

Figure 9.2 Temperature- Humidity Index (THI) were calculated from Various Temperature and Relative Humidity

The criterion to be referred to in order to evaluate the temperature and the humidity together is the temperature humidity index (THI). The temperature humidity index can be calculated in various ways. However, the starting point is the calculation of an index, which takes into account the temperature and the relative humidity. A graphic that was prepared using THI values calculated for various temperature and humidity values is presented below (Figure

[3] The values on the figure are calculated by the equation of THI=Temperature*0.8+Humidity*(Temperature-14.6)/100+46.6.

9.2). Areas with different colors are seen on this graphic involving relative humidity(%) on its horizontal axis (X-axis) and temperature values (°C) on its vertical axis (Y-axis). The area on the top, that is the area where the temperature humidity index is below 72, is the area that is considered as the most suitable area for the cattle. In the area immediately below this one, the temperature humidity index varies between 72-79. This range is where the heat stress begins but is at tolerable level. If the temperature humidity index is in between 80-89, then certain measures are required to prevent stress arising from heat. However, the THI value exceeding 90 indicates a severe heat stress. Mortalities are expected if this value is 99 or higher.

The temperature is initialized from 20°C in Figure 9.2. The fact that the most suitable temperature area for the cattle is 5-15°C as well as that it can be defined as the stress-free area for all humidity rates at this point has played a part in selecting this value. Furthermore, it should be noted that a significant drop in yield is not seen in temperatures down to -5 degrees, if humidity and wind speed is not high and feeding is adequate. Moreover, even temperatures lower than this, e.g. -10 or -15°C is not harmful except for extraordinary conditions. These conditions that can be considered as extraordinary are underfeeding, very sudden fall in temperature, very high humidity rate and high wind speed. However, these are not the incidents seen very often. Therefore, cold should not be considered as a problem for cattle in Turkey. This is admissible not only for mature cattle but also for heifer and calves. Briefly, the main problem for cattle is heat, and the high humidity in company with it. It should be conceived from the marking in Figure 9.2 that a drop in milk yield could be expected when the temperature goes over 25°C in an area where humidity rate is 60%, and that the milk yield would bottom out when the temperature goes over 30°C if measures are not taken.

Humidity: When the humidity that is normally desired to be in between 60-80% is lower or higher than these values it does not affect the yields. However, in case high humidity, as mentioned previously, is seen simultaneously with very low or very high temperature, then it causes trouble. But the relative humidity does not have a significant effect in temperatures between -8 and +24°C.

Wind Speed: Wind facilitates the heat loss for cattle. This is a desired effect in hot weather conditions. In cold weathers however, if the wind speed is also high, then animal should effort more to maintain the body temperature. For this reason cattle should be protected from high wind speed in winter months.

9.6 Barn Types

The barn types used in dairy cattle breeding can be separated into groups according to the degree of openness, floor arrangement, freedom of movement provided to the animals or various combinations of these.

9.6.1 Barn Types According to Covertness Degree

In an evaluation to be made according to the openness degree, it is appropriate to gather the dairy cattle barns in three groups as closed, semi open and sheltered.

Closed Barns: They are the barns surrounded with walls on all sides and covered with a roof made of various materials. Even though the covertness degree in barns constructed in recent years has been decreased primarily due to the increase in the window area, a large proportion of the barns in our country are closed barns. These barns, where sufficient window area and ventilation shaft or ventilation space is not reserved more often than not, and where, even if being reserved, they are partially or completely closed especially in winter times, are buildings that are far away from providing the benefit expected from accommodation system. Yet the main deficiencies of these barns are not the ventilation and illumination. Many of this type of barns create numerous difficulties and inadequacies in carrying out the most important works such as feeding, manure removing, milking and watering. Particularly the barns that are constructed in or very close to the courtyards of houses continue to be a pollution source for immediate surroundings and even for the residential area. In brief, it will be very worthwhile to ameliorate the barns having above drawbacks or to build new barns instead of them. Some issues concerning the barns to be ameliorated as well as the barns to be reconstructed will be discussed below. Taking these issues in to account will produce benefits to employees as well as to animals, thus to employers.

The wall height should be around 3 m in closed barns. Window area should be at least 5% of the floor area. Ventilation shafts can be included on roof, or the roof ridge can be reserved thoroughly open. Construction cost of closed barns is higher compared to than other types of barn.

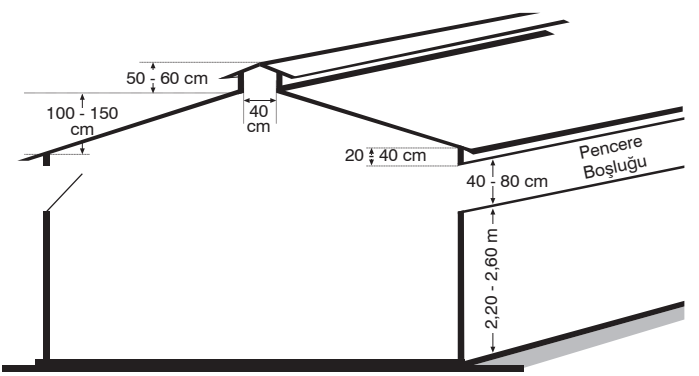

Figure 9.3 Roof and window openings in a closed barn

Ventilation in Closed Barns: Efficient ventilation is required to expel out the excess heat, moisture, malodor and harmful gases in closed barns. The damage that the insufficiently ventilated barns will give to the animals is much more than the damage that is speculated to occur due to cold. The ventilation capacity required for a dairy cow sheltered in a closed barn is around 200-600 m^3/hour depending on the size of the cow, milk production, desired in-barn temperature, outdoor temperature and season and the difference in height between the air inlet and outlet openings. This value should be as 50-150 m^3/hour for young animals. In order to provide efficient ventilation in closed barns, openings should be reserved on roof and walls. The opening to be reserved on the roof (the roof ridge opening) in the barns with a width less than 10 meters should be minimum 20 cm from end to end. The opening to be reserved on

the roof should be increased as the barn width increases. The following equations can be used to calculate the minimum value of the opening to be reserved on the roof in barns with a width more than 10 meters.

$$RO(cm) = 20+5*[(BW - 9)/3]= 5*(1+BW/3)= 5+ (5/3)*BW$$

In these equations; the abbreviations stand for; RO= Roof opening (cm), BW= barn width (m). As one can understand from the equations, the roof opening will increase as the barn width increases. The opening to be reserved on the roof, as mentioned earlier, should be from end to end.

There might be differences between the roof opening value calculated from the above equation and the roof opening value to be calculated based on the minimum ventilation capacity per cow. In such a case the higher value should be predicated on. The ventilation capacity per cow in Turkey, with a generalizing approach, can be taken as 400 m^3/hour. In this case, the roof opening per animal should be approximately 1000 cm^2. In case of large cows with high milk yield, these numbers rise to the values of 600 m^3 and 1400 cm^2/animal. When 1400 cm^2 roof opening is required, the minimum value of the roof opening for barn with dimensions of 27m*70m for a herd of 200 milk cow is calculated as 1400*200/(70*100)=40cm. Since this value is less than 5*(1+27/3)=50 cm, the roof opening of the barn should be 50 cm. When the value selected for the roof opening is 50 cm, the opening on each side walls is calculated as minimum 75% of the roof opening, that is as 50*0,75=37,5 cm. Briefly, the roof opening of such barn will be minimum 50 cm, and the window openings on each side walls will be again minimum 37,5 cm.

The barns in majority of the existing small enterprises in Turkey are constructed in the same courtyard separated from the house or on the basement of the house or near to it. These closed barns with inadequate ventilation and illumination can be made more useful by simple measures. The first one of these measures coming to mind is to create windows if not existing or, if existing any, to enlarge the existing windows or increase the number of windows to reach minimum to 5% of the floor area.

The ventilation shaft and the roof ridge opening is a subject matter of only the barns with an independent roof. If ventilation chimney is not placed during construction, chimneys not to be smaller than 40x40 cm dimensions can be constructed on the highest possible place of the roof in a way to be placed one by one on right and left of the ridge in around every 5 m. Wood or metal materials can be used as chimney. It will be useful to make a chimney cap in order to prevent snow and rain from entering through the chimney. The length of the part of the chimney to fall to the barn interior should be 20 cm from the ridge, and the length of its part beyond the ridge to fall to the barn exterior should be minimum 50-75 cm. The efficient chimney height should be around 4 m for the chimneys to function efficiently. Yet the distance between the ridge and the top of the wall that the roof lies on will be 12m*0,25/2=1,5m if the roof slope is 25% on a barn with a width of 12 m. The value will reach to 2,25 m with the

chimney length of 0,75 m from the ridge. In case the lower edges of the windows on the side walls are 1,25 m below the point that the roof lies on, then the effective chimney length will reach to 3,5 m. Efforts should be make not to allow this value to drop down below 3 meters. However, it is not meaningful to make the chimney longer than 1 meter to achieve this.

Illumination: It is possible to avail from the natural lighting only in day times. A window area of at least 5% of the floor area is required in order to provide efficient illumination in the barn. The lighting can be reinforced by placing pellucid cover elements on the roof. Illumination should also be provided during night times in order to facilitate the jobs of the people working in the barn and to check the animals. For this purpose, it is a proper way to use fluorescent bulbs and to place them in a protection.

It is not necessary to illuminate each section at the same level in a cattle barns.. For example, a bulb of 40 watts is sufficient for every 20-25 m^2 in the areas other than the milking parlor. This provides approximately an illumination of 60-75 lux or 60-75 lumen/m^2. This value should be a bit higher for the milk parlor. A bulb of 40 watts is sufficient for every 15-20 m^2 of the milk parlor. If the animals are kept out of the barn, i.e. in a section outdoors, these areas should also be lightened. In illumination of such areas the light source should be placed close to the manger. The luminous intensity can be kept lower than the one recommended for normal barns. It is appropriate that the daily illumination time is 16-18 hours in barn sections where the dairy herd is sheltered, and 12 hours in sections where dry cows are kept.

Semi Open Barns: These are the barns that are surrounded on three sides with wall and top covered and generally the southern sides are open. They can be used cavalierly particularly in areas that are not extremely cold.

Open-shed Barns: These are the barns where all sides or three sides except for the windward front are open, and the top is completely or partially covered with a shed. These barns that can easily be used in almost every region of Turkey in fattening can also be used in dairy cattle raising if supplemental units (milk parlor, delivery room etc.) are convenient. At least the young animals should be raised in this type of barns in dairy cattle farms. Because, the husbandry costs are lower for animals kept in these barns that can be constructed at a cheaper price as well. Details will be provided for this type of barns in the section regarding the accommodation of the young ones.

9.6.2 Barn Types According to Floor Arrangement

Whether constructed as closed or semi-closed or with shed, three types of barns can be referenced according to the freedom of movement provided for the animals or to the barn floor arrangement:

1- Tie-stall barns

2- Free stall barns

3- Free (no stall) barns

The first two of them that are used most commonly will be dwelled on in details.

Tie-stall Barns: The vast majority of the barns in Turkey, especially the ones that were constructed until 10-15 years ago are tie-stall barns. The prevalence of this type of barn is related to the habitude of people and the herd size rather than to their advantages.

The basics of the system are tying the animals to the stalls prepared for them and providing all services there. There are different applications in terms of tying form, stall lengths and the position of the mangers and the feeding paths. For example tying can be performed with chain or halter. Stall length can be 160 cm, 200 cm or 300 cm, while the mangers can be with oval or rectangular section and the feeding road can be in the middle or on sides. There can be a single, double or more rows where the animals are tied on right or left of the feeding alley.. The ones that have the highest implementation possibility of these types will be elaborated here.

The tie-stall barns for dairy cow should be constructed in double rows considering the growth of the herd in the future. The feeding alley being in the middle in a double-raw barn provides certain advantages for feeding. Manure cleaning and milking in these barns are performed through the service alley close to the walls (Figure 9.4a). If the cows are placed not face to face but tail to tail , the feed is distributed in each row separately (Figure 9.4b). On the other hand the manure is removed from the middle. But the manure of each row is collected separately again in order that the middle section of the barn is not contaminated completely.

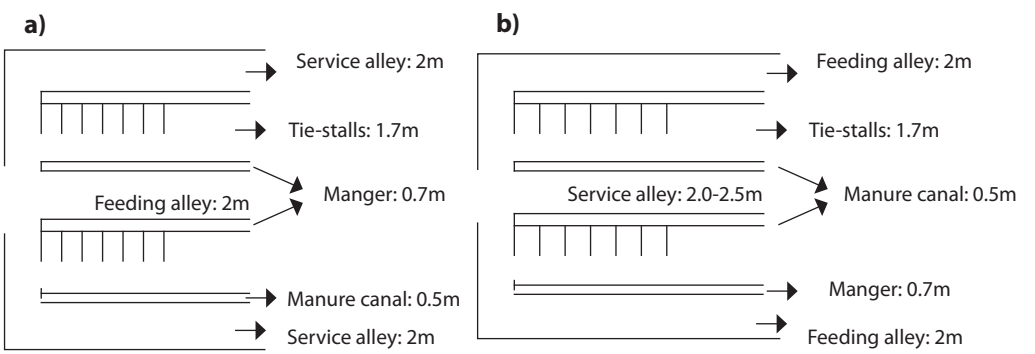

Figure 9.4 Tie-stall barn floor where feeding alley is in the middle and on sides

The width of the feeding and service alley depends on how the feeding and cleaning will be performed, i.e. on the mechanization degree of the barn.. If the feeding and the cleaning will be carried out by tractor, the width of this area should not be lower than 2.5 m. The lowest value for feeding and service alleys is 120 cm when feeding and cleaning is carried out based on manpower. However if the service road will be in the middle the distance between the two rows should not be lower than 2.5 m.

The length of the stall should be 160-170 cm, while their width should be 110-120 cm. The width of the manger should not be decreased below 60 cm. Considering these assumptions, the width of a double-row tie-stall barn, which is cleaned by tractor and has the feeding alley in the middle will be approximately 2.5+1.7+0.7+3,0+0.7+1.7+2.5 = 13 m. The barn length

is determined according to the number of the cows. If the enterprise will be of 30 cows, the barn length is calculated as 18 m considering that 15 cows per each row and 120 cm width for each cow is required. However this length becomes around 22 m with the spaces reserved on each side of the stalls.

The farms stocking a small number of cows do not intend to construct double-row barns. They might prefer single-row barns. In this case the length of the barn gets longer and its width gets shorter. For instance, while the length for an enterprise of 20 animals rises to 25 m, the width drops down to between 6.5-7.0 m. But making the barn in a single row might cause greater problems when the growing of the herd comes into question. For this reason, if a tie-stall barn will be constructed and the capacity will be over 20, then constructing a double-row barn should be preferred.

Elements of a Tie-Stall

Stall Floor (Standing Platform): Floor-dominant view of a tie-stall barn is given in Figure 9.5. One of the important elements of stall in Tie-stall barns is the stall floor. The stall floor for a cow, as indicated previously, should be prepared as 160-170 cm long and 110-120 cm wide depending on the size of cows raised. A slope of 1-2% should be given on the stall floor from the front side of the manger towards the urinary channel.

Stall standing platform, that is the stall floor, can be covered with various materials. The material to be selected should be cheap, having lower thermal transmittance, and easily cleanable. The stall floor can be covered with concrete, hallow barn brick or ready-bedding that is manufactured specially for this purpose. When the floor is concrete, it is required that the concrete is treated in a way to prevent slipping and the bedding material is used always. When hallow barn brick is furnished on the floor, the cleaning is facilitated as well as less bedding material is used. If available, hallow barn brick is a material to be recommended for stall floor.

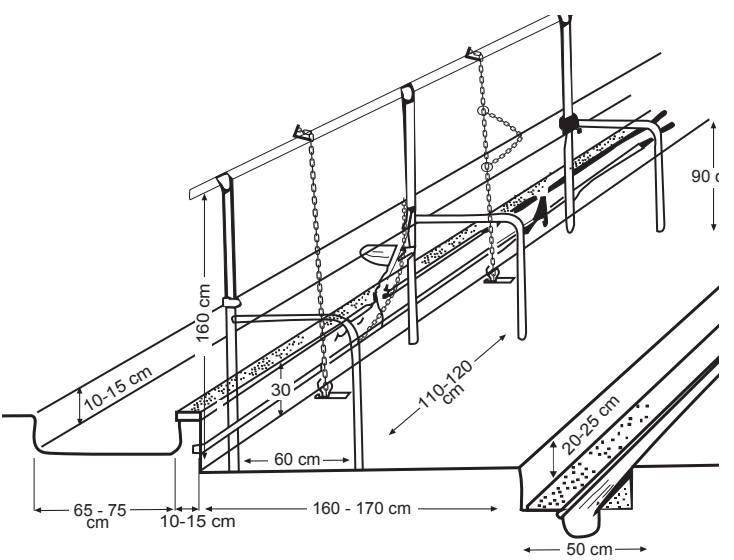

Figure 9.5 A view from a tie-stall barn and various dimensions, cm

In tie-stall barns, even if its use is not so common, it is very suitable to bed stalls with ready cow bedding. These materials provide both heat insulation and easy cleaning. Additionally, use of bedding is also substantially decreased

or eliminated depending on the thickness and the softness of the material to be used. Types having factors to prevent slippery should be preferred.

Manger: Mangers in different forms can be produced in tie-stall barns (Figure 9.6 a, b and c). However, no matter what the form of the manger is, following issues should be taken into consideration.

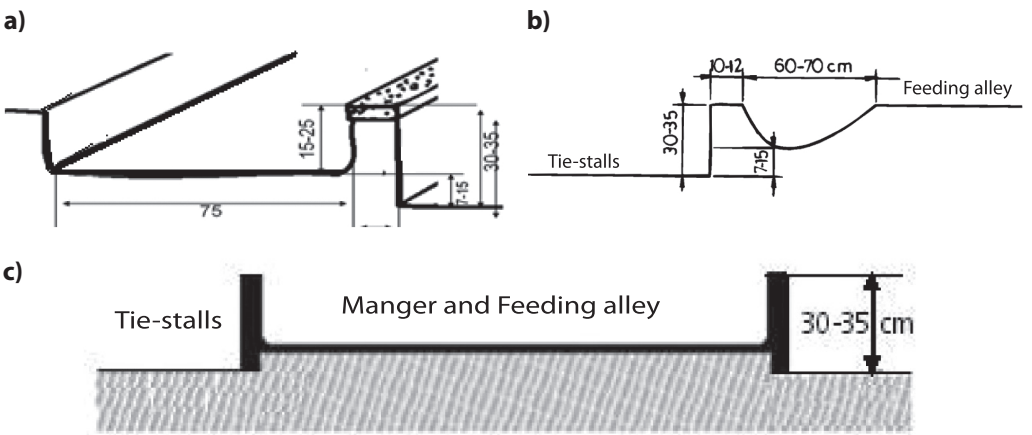

Figure 9.6 Manger form for tie-stall barns and some details, cm

The height of the manger front side from the stall ground should not exceed 30-35 cm. Otherwise; the lying animal has difficulties in placing its head over the manger or cannot place it. Thus, in this case it tries to lie not vertically but parallel to the manger.

One of the mistakes made frequently in Turkey is that the manger base is lower or very higher than the stall floor. Yet the most appropriate one is constructing the lowest point of the manger base as 7-15 cm higher than the barn floor. Thus, it is enabled that the cow eats its feed easily.

Another important issue with the manger is the manger width. The net width of the manger should not be allowed to drop down below 60 cm. So, a volume to take sufficient feed is created, as well as the tied cow can reach to the farthest point of the manger.

The shape of the manger is also important. The shape to be given to the manger should be determined considering the distribution of the feed and how the cleaning will be carried out. As it as seen in Figure 9.6a and b, one of the mangers satisfying the above expectations most conveniently are the mangers the inner surface of which is flat or sloped slightly to the stall.

There should not be sharp corners on the mangers and the manger surface concrete should be highly flat. The thickness of the manger side facing the stall should not exceed 10-12 cm. Similarly, the part falling to the feeding alley side of the manger should be either at feeding road level or the feeding alley and the manger base should be constructed almost at

the same level (Figure 9.6c). This will facilitate both feeding and throwing the feeds fallen on the feeding alley back in to the manger.

Stall Partition Elements: The area for each animal should be separated from the others in tie-stall barns. Iron pipe with a diameter of around 5 cm and shaped properly can be used for this purpose.

If stall partition element is not made, in other words if a stall is not put into use of a single animal, it will not be possible to prevent cows from injuring each other. Furthermore, it will become hard to keep the stalls and thus the cows clean. In tie-stall barns, the partition element separates not the 170 cm long stall entirely, but its 70-75 cm part from the manger. The height of the partition elements should be 90 cm from the floor (Figure 9.5).

Tying Elements: Tying elements consist of vertical pipes used for carrying the system that the animals will be tied to and the horizontal pipes joining them. The distance between the top side of the vertical pipe and the stall base should be 160-180 cm (Figure 9.5). Vertical pipes should be placed not inside of the manger front side but 10-15 cm behind this point (towards the stall). Thus, more convenient movement opportunity will be provided to the animals.

Iron pipe with a diameter of 5.0-7.5 cm should be used in construction of the tying elements as well. There should not be any welding burrs and sharp sections on neither tying nor stall partition elements. There are several types of tying material in tie-stall barns. The one that can be constructed most easily of these is tying with chain. Tying chain consists of two pieces, one is short and the other one is long. The long piece (200-210 cm) is fixed on the ground at a distance of 8-10 cm from the manger exterior side, in such a way that it falls right into the latitudinal middle of the stall (Figure 9.7). Starting from 190 cm of the free edge of this piece, larger links should be added with 2-4 cm intervals to be affixed to a hook installed on the vertically located pipe.

Shorter element is a chain part around 50-70 cm long, on both ends of which rings with such a width that long chain can easily moves inside of it are affixed. This short piece is the one that will move during lying down and standing up of the animal. Oval iron instead of chain can also be used in moving part. In this case, the places where the long chain will pass through should be kept a bit wider and this part should be bended in a way to compass the neck of the animal (Figure 9.7).

Drinking Bowls: Dairy cattle should be given opportunity to drink water at any time they wish. This can only be provided by one automatic or semiautomatic bowl for two cows in tie-stall barns. Automatic drinking bowls of many different types can easily be supplied from the market. The top side of the bowl to be installed on the vertical tying element should be at a 50-60 cm height from the stall floor. If it is higher, it will become harder for the animal to drink water. The bowls installed close to the stall floor however, get contaminated easily and rapidly.

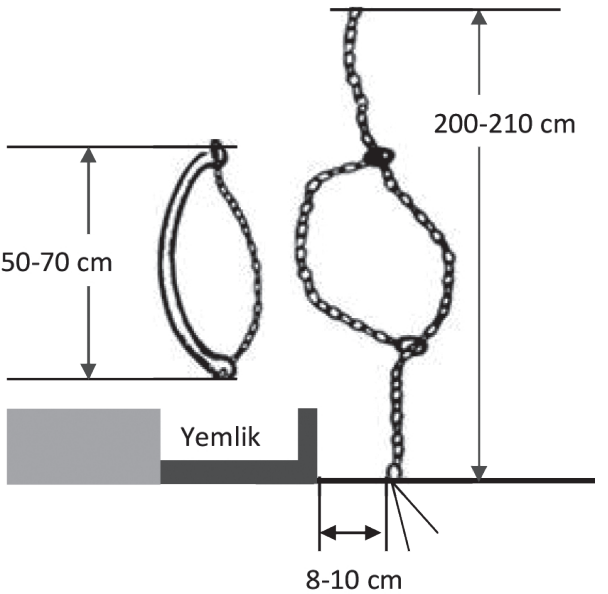

Figure 9.7 Tying elements for tie-stall barns

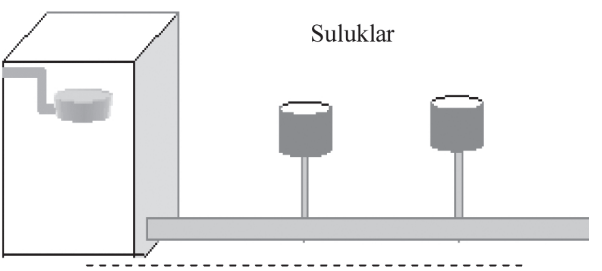

Figure 9.8 Semi-automatic basin system

No matter which type of drinking bowl is used in the enterprise, water installation should be installed overtly. But this installation should also be prevented from being damaged by the cows.

Semi-automatic drinking bowls can be produced by enterprise's own means. Again, as one per every two cows, containers (drinking bowls) connected to each other are installed on the tying elements and the water carriage line to them is connected to the small water tanks constructed at one or two suitable areas of the barn. The water level of the drinking bowls can be adjusted by water gage to be placed in this tank or tanks.

The opening width of the containers to be used as drinking bowls should be around 20-25 cm. Defective liquid gas (bottled gas) tubes of 12 kg, which give two bowls when cut right through the center, or similar materials can be used for this purpose.

In this system that is defined as semi-automatic drinking bowl, the main (carrier) water pipe should be positioned with a slope of 0,5-1 % and a valve should be placed end the water pipe. In this way, the system can easily be cleaned (Figure 9.8).

Manure Canal: When the stall length is 160-170 cm, it is expected that the cow urinate and defecate directly to the stall exterior. In order that the excrement does not spread on the stall floor, a canal to collect the manure should be constructed 20 below the stall floor. In other words, the floor that the animal stands on should be 20 cm higher than the top surface of the manure canal and the service alley. It will be sufficient when the depth of the canal is around 30 cm and its slope is between 1-2%.

In systems where bedding is used, the possibility for the canal to be blocked by time is very high. For this reason, if bedding is to be used, it will be more suitable to cover the canal in such a way that it can only leak the urine.

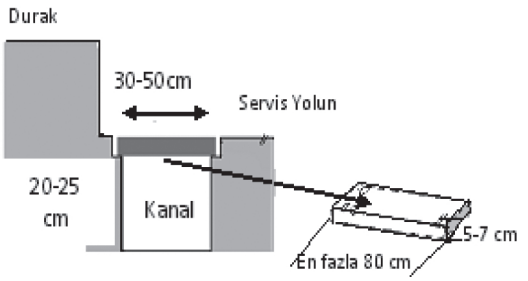

Figure 9.9 Covered manure canal and canal cover

The canal that should have a width in between 30-50 cm can be covered with concrete covers. The thickness of the covers should be 5-7 cm and should involve iron inside. It should also be noted that it will require a serious force to carry and, when needed, to lift the covers with a length exceeding 80 cm.

The width of the cover to close the urine canal should be 2-3 cm lower than width of the canal. Additionally, cleavages of 8-10 cm long and 1-2 cm deep should be opened on the lower part of the cover in every 10-15 cm. These measures will facilitate the liquid manure and water to leak into the canal (Figure 9.9).

Making the manure canal in this way, i.e. stall is 20 cm higher than the service road, and the top surface of the manure and the service road is at the same level, causes the manure to spill over to the service road. If it is desired to get rid of this situation, which does not pose a big problem, the top surface of the service alley can be constructed 15 cm higher than the manure canal. In this case a canal having a 20 cm height on stall side and a 15 cm height on service alley side comes into existence. It is not required to cover this canal. However making a small drain canal with a depth of 10 cm and a width of 10 cm in order to separate the liquid manure on the base of this canal that should be around 50 cm wide will be useful. This canal can be covered with a punched and strong metal.

9.7 Free-Stall Barns

"Free stall barns", having stalls where animals are not tied but can enter into one and lie when they wish to lie, are the constructions that are most suitable for dairy cattle breeding. Because;

- Stalls in free stall system are constructed in such size and so as to ensure that the manure falls directly on the service alley.. Therefore the dirty risk of the cows is lower.
- If bedding material straw, sand etc. is used instead of permanent animal beddings that has become widespread in recent years, they are spread only over the stalls and can used for a long time. Therefore, bedding cost highly decreases.
- In free stall system, the milking is generally carried out in a separate area. Milk obtained in this area, in other words in milking parlor is quite clean and hygienic, compared to the milk obtained in barn directly.
- It is more suitable for availing from machinery in manure cleaning and feeding, i.e. for mechanization, compared to tie-stall barns.

- In free stall barns, while some of the cows are lying, remains are standing or in manger and this allow to place 10-15% more cows than the number of stalls in such a barn.
- Leg and meme injuries are lesser. Following of sickness and rutting is easier.

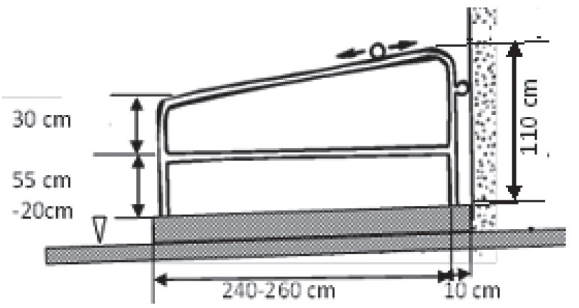

Figure 9.10 Free stall cross-section

Dimensions of Free Stalls: Free stall system can be applied for animals of all ages starting from the age of six months provided that the stall dimensions are different. The length of the stall for cows should be 2.50-2.75 m and the width should be 1.2 m. In case of cows from small size breed., it is sufficient that the stall width is 1.10 m and its length is 2.30-2.40 m.

In order to separate the free stalls from the service road and thus to prevent the manure on the service alley from entering into the stall, the stall floor should be approximately 20 cm higher than the service road (Figure 9.10).

The floor of the free stall can be covered with concrete, compressed soil or rubber-like materials manufactured for this purpose. If the floor is soil or concrete, it is required to spread some bedding over the floor. Though sawdust, sand and straw can be used as bedding, straw should be preferred. If stall floor is covered with the material manufactured as "cow bed", it is not necessary to use bedding material additionally. But permanent measures should be taken to prevent the bedding material from sliding towards the service road.

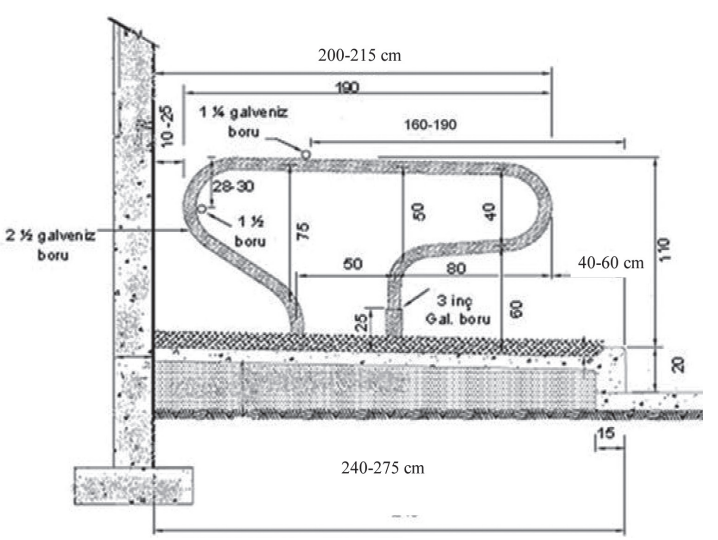

Figure 9.11 Cross section of the free stall View of free stall barn

A ridge with a width of 50-60 cm and a height of 10-20 cm can be constructed on the head section of the free stall. This ridge or "brisket board" functions as a pillow for resting cows and thus decreases the chances for defecation in stall while lying down..

Stall side boxes are used for separating the

free stalls from each other. From these elements that can be in various types, the ones that are cheap and can be constructed easily should be preferred. The material to be used should be rendered in such a way that not allows animals getting injured. The iron pipes with a diameter of 2.5 inches are suitable for this purpose (Figure 9.11).

As mentioned previously, stall side boxes can be constructed in various forms. No matter in which type it is, the height of the side boxes should not be less than 85 cm. If a slope towards the service road is to be given, a height of 85 cm on service road side and of 110-125 cm on front side should be provided. Additionally, vertical elements creating spaces each with 40-50 cm should be added to this opening between the floor and the stall side partition. These elements can be pipe with a diameter of 5 cm. Today there are workshops manufacturing and firms selling the free stall side boxes. On top of the stall side boxes, moving elements allowing to place a vertical pipe over them should be assembled 30-60 cm away from the front (Figure 9.10 and 9.11). The iron pipe placed on these elements and called neck rail ensures that the animal standing up goes backwards. Thus, the urine and the feces of the animals that desire to piss without leaving the stall also fall out of the stall. It is important to construct the shoulder straps as movable since it will allow adjustment of the stall long.

The front side of all stalls in a barn may not fall to the barn walls. In bars where two rows are placed on right and left of the feeding road, this is the exact case if it is intended that the cows lie facing each other (head to head) (Figure 9.12b). If the two rows on the right and left of the feeding road are placed providing that the cows lie back-to-back with each other (tail to tail), a wall with a height of 110-130 cm should be constructed in front of the stalls that are not near the wall (Figure 9.12a). When the stalls are placed in a way that the animals are facing each other (head to head), the total of the lengths of the two rows should be 5 m, i.e. 2.5 m each. However if there is wall between the stalls, the length of each stall should be constructed as 2.75 m for large size breed.

a)

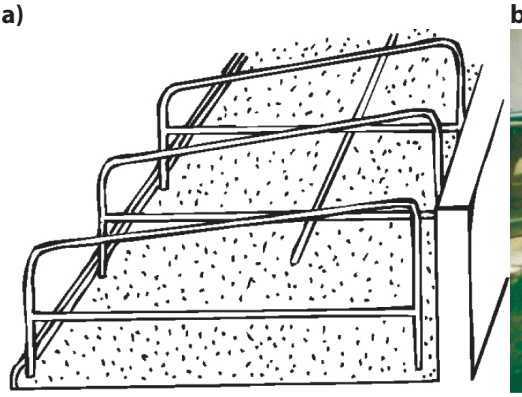

b)

Figure 9.12 View of free stall barn

Service Alley: In free stall barns, the area where the animal movement is most intense is the service road. Therefore, the service road should be constructed wide enough to allow

animals to move conveniently. Convenience means that, while a group of animals are feeding, the others can easily pass through their backs. A space around 3.5-4.0 m between the manger and the stall should be reserved for this purpose (Figure 9.13). If there is not manger on both sides of the service road, this area can be kept narrower, for example 3.0 m. However, if the barn cleaning will be carried out with a stripper connected to a tractor, care should be taken that all service roads are close to each other or at the same width. Care should be taken that, in big barns, the distance that a cow is required to cover to reach the manger and the drinking bowl does not exceed 20 m, or to reserve an across alley for every 15-20 stalls. In other words, if the length of the barn is over 50 m, an across alley should be reserved not only from the beginnings but also from the middle in order to access to the manger. If drinking bowl will not be located, the passages to be reserved both on beginnings of the rows and on centers can be with a width of 2 stalls, for example 240-250 cm. However, if drinking bowls will be located on these areas, It should be ensured that the passages have a width of four stalls, i.e. 480-500 cm (Figure 9.14).

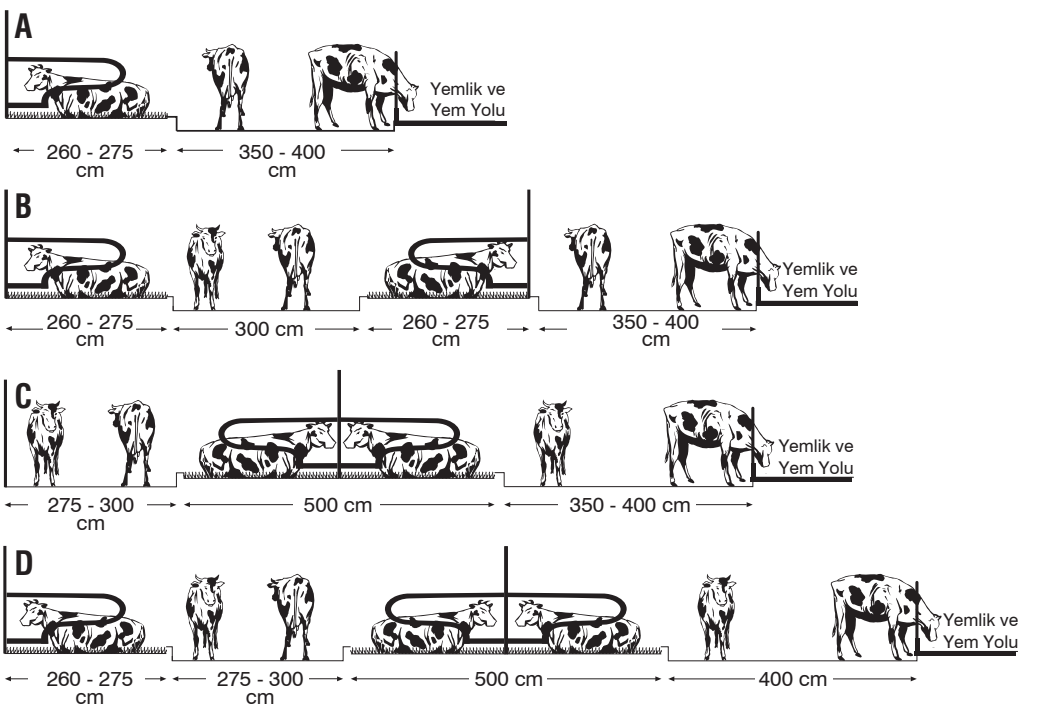

Figure 9.13 Various layouts of stalls and the service alley dimensions

Drinking Bowls: In free stall barns, one automatic or semi-automatic drinking bowl for every 10 cows is sufficient. In other words, in groups including more than 10 animals, at least two drinking bowl should be available. Otherwise, animals might go without water from time to time. Bowls should be located in areas where contamination will be at minimum. Bowls that are very close to the mangers or on just sides of a manger are quickly contaminated and

cause the manger to get wet as well. Almost the most suitable places for the bowls are right or left of the manger across alley in barns involving two-three rows on right or left of the feeding road (Figure 9.14). In single-row barns however, it is almost a must to construct the drinking bowls close to the manger.

Mangers: In free stall barns, all of the animals will go to the manger at a time. For this reason, the feeding space per cow should not be lower than 60-70 cm. The required space can be easily provided if feeding is not performed on the section involving the stalls. Additionally, in case there is a single or double row on right or left of the manger in the barn (Figure 9.13 a, b, c) there will not be faced with any problems since the manger length per animal will be equal to the stall width (120 cm) or its half (60 cm). However, in barns with 3 rows (Figure 9.13 d), if necessary measures are not taken, the feeding space per cows falls short. Indeed, even when considering necessary drinking bowl and passage areas, in a three-row barn (Figure 9.13 d) the manger space length per cow falls behind 50 cm. In brief, while evaluating different settlement forms, the manger length per cow should also be taken into consideration and constructing a three-row barn should not be considered as a suitable option unless there is an obligation in terms of land usage.

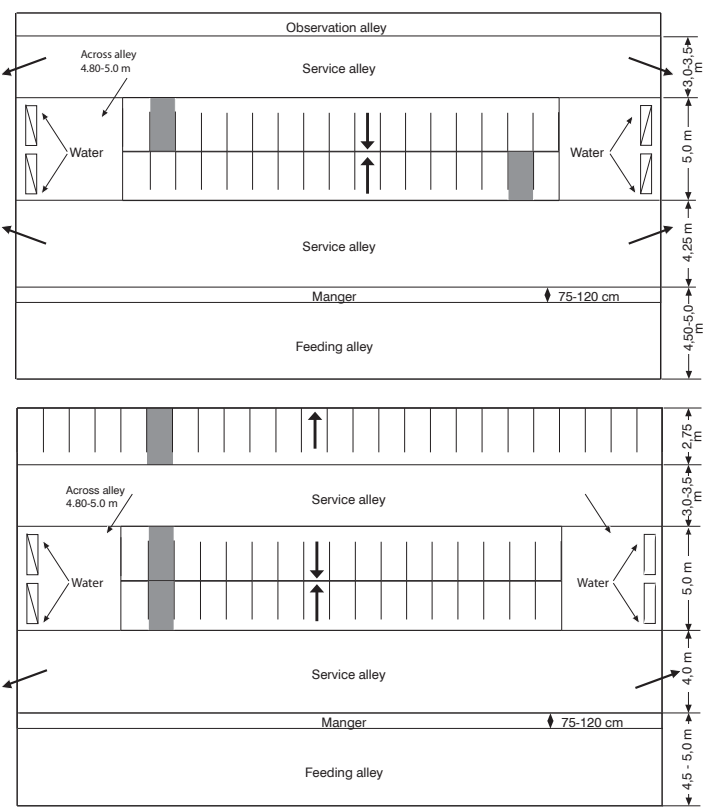

Figure 9.14 Layout of drinking bowls and across alleys

Manger Front-Side Protectors or Feed Fences: In free stall barns, the protectors that are separating the mangers from service alley and built on the front-side of the manger can be at various forms. While selecting any of them, the ability of being easily and cheaply constructed and the convenience it will provide for the animals should be taken into consideration. Besides, systems allowing restraining the animals nearby the manger when needed can also be preferred. The details on various manger protectors are seen in Figure 9.15 and 9.16. If the protectors in the type seen in Figure 9.15 will be constructed, it will provide certain advantages if the height of the first element after the manger top side is adjustable. Since use of cornered material in manufacture of protectors will cause alopecia on neck of the animals, oval pipes should be preferred. Pipes should pass not just directly over the manger front-side but through 10 cm inside towards the manger. This precaution provides that the animals benefit better from the manger.

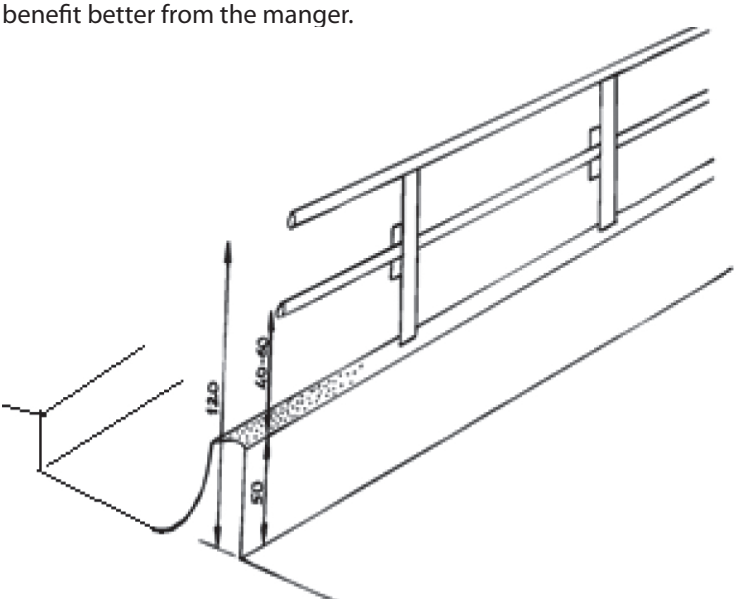

Figure 9.15 Adjustable manger front-side protector

The height of the very top point of the manger protectors should be 120 cm from the barn floor. This height is sufficient in preventing animals from passing to the manger and the feeding alley. Of this totally 120 cm height, around 50 cm as from the barn floor is closed with the manger front-side. On the remaining part of 70 cm, two elements are placed, one is fixed on the top and the other is height-adjustable between the manger front-side and the above fixed pipe. The gap between the manger front-side and the moving element should be between 40-60 cm. Steel rope, instead of iron pipe, can also be used for moving element.

If the manger front-side protectors will be manufactured as in Figure 9.16 a, a height of 120 cm from the floor, 40-50 cm of which is manger front wall, is sufficient. The point to pay attention to here is that the bottom and top frames of the protector are thicker compared to the boxes. The partition elements should be welded in intervals of 40 cm in such a way to produce a 60 degrees angle with the frame on the bottom. Front protectors of this type are highly useful.

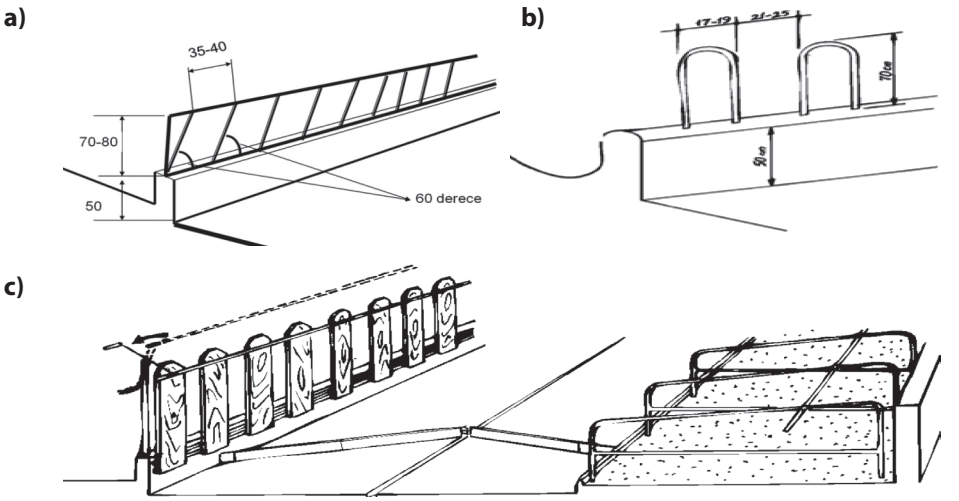

Figure 9.16 Various type of feed fences

The systems in Figure 9.16 b and 9.16 c are the systems allowing animals to be caught in the manger when desired while they are feeding. The height, like the other ones, is 120 cm, the 50 cm of which is manger front wall. Wooden material as well as iron pipe can be used as protector. When iron pipe is used, the pipes bended in reverse U shape should be fixed reliably on the manger front-side.

The distance between the two arms of the reverse U's should be 17-20 cm and the distance between these elements should be 21-25 cm. In both applications (iron or wood) it is possible to catch the feeding cows with a mechanism to be assembled on the robust columns to be erected on the front-side of the manger. The function, which is very simple, of this mechanism is to close the upper parts of the open protectors by a wood or a pipe while the animals are feeding (Figure 9.16 c).

The manger front-side protector system which is seen in Figure 9.17 and which requires more material, labor and care compared to first three protector systems also allows catching and restraining of cows during feeding. It is possible to supply this kind of front protectors from the market.

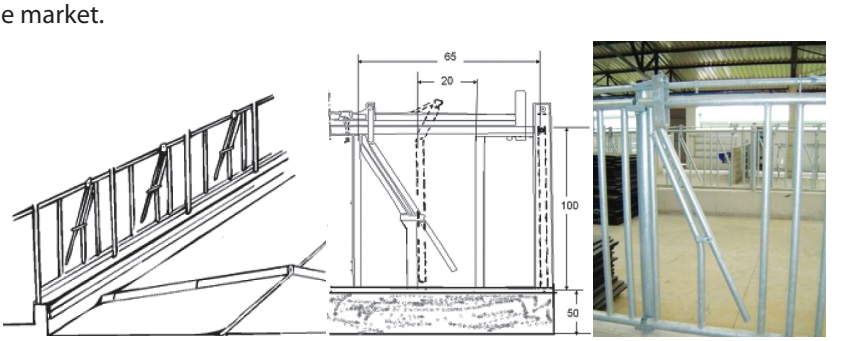

Figure 9.17 Manger front protector allowing catching of the cows in the manger

Manger and the Feeding Alley: The mangers to be constructed for free stall barns may be different from the ones in tie-stall barns. Two mangers convenient for them are seen in Figure 9.18. The width of the feeding alley in free stall barns depends on how the feeding will be carried out. But, particularly in big barns , even if the feeding will be carried out manually for the time being, using of tractor should be taken into account and the feeding road should be constructed with a width of at least 3 m. The height of the feeding alley should not exceed the manger front-side level.

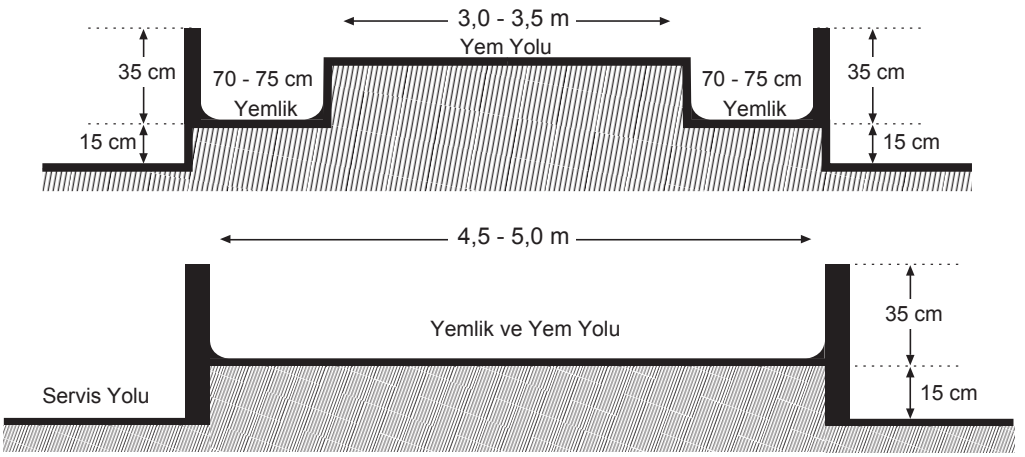

Figure 9.18 Two manger types to be applied to free stall barns and the feeding alley width

9.8 Milking Parlor (Milk House)

System Selection

The farms having high number of cows generally perform milking in a separate area arranged for this purpose. The enterprises having less number of cows however, can perform milking in a place allowing restraining of cow. The size of this area called as the milking parlor or the milk house depends on the cow numbers of the farm and the milking system to be selected.

Taking into account that normally the cows will not be milked for two months in a year, it can be stated that 85% of the all cows will always be in milking. This means that in such a case a farm having 100 cows will always milk 80-85 cows in average.

In the milking system where cows enter and exit the milking house collectively, the preparation and milking of a batch of animals is completed in around 9-12 minutes. If a milking system that is capable of milking 10 cows simultaneously is selected, in a herd where there are 100 cows to be milked, a complete milking takes around 1.5-2.0 hours.

The determination of the number of cows that can be milked simultaneously in a milking unit, in other words the milking parlor capacity should be decided considering the prices

of the milking machines, the size of the herd, the manpower intended to be allocated for milking, and the time allocated for milking. While taking this decision, it should be kept in mind that the first one and the last one of the cows to put on the milking clusters in a milking group leave the milking house simultaneously in many of the milking systems. Furthermore, it should be noted that a milker is required to allow1.0-1.5 minutes of time per cow, distributed to various stages, for carrying out jobs such as preparation for the milking etc. If the number obtained in the evaluations to be made in the light of this information cannot be reached, it should be considered that there is a deficiency in the management of the milk parlor. In order to reach to such decision, it is necessary to take a look at whether the number of the animals milked in an hour in milking parlor is less than 6-7 times of the milking clusters or not. For example, in a milking system with 16 units, the number of cows milked in an hour should not drop down below 100.

The number of the cows that a farm, which is determining the herd size and the time to be allocated to milking, should milk simultaneously, in other words the number of the milking clusters (MC) can be calculated by the following equation.

$$MC = N*S/(1.2*TS)$$

In this equation; N: Herd size, which means the total number of cows, S: The time elapsed for milking a group (minute), TS: The time prescribed for milking of all dairies in one time (minute).

Arranging the Milking House

The milk house in newly established enterprises should be constructed in an area that will facilitate the work flow, and entering into and exiting from the milking house of animals should be provided without any need for further intervention. Also, when adding a new milking house to the established farms, the persistency and the cost of the modification to be made as well as the aforementioned issues should be taken into account.

Milking Stations

There are some differentiations in locating the milking stations. Various examples of them are shown in Figure 9.19. Here, as it can be seen, there is a height difference between the surface that the milker stands on and the section that the cows stand on. Generally, the milker is 75-85 cm below. This is necessary for the milker to work conveniently.

If the milking stations are constructed in such a way that they are placed not on the side but at the behind of the cows, from the ground that the cows stand, 60 cm of the obstacle between the milker and the cows should be kept open, and the remaining section over this should be covered with a metal sheet. Thus, the falling of the excretion and urine of the cow on to the milker and to the milking trench is prevented. A grating canal should be constructed on the place where the urine and the feces fall on to. Thus the urine and feces do not accumulate in the milking station. Similarly, a channel to provide flow of the cleaning

water should be included in the trench that the milker stands in. In case of purchasing static milking system, the best way is to perform the arrangement of the milking parlor, in particular the milking house and milking stations, in line with the recommendations of the vendor.

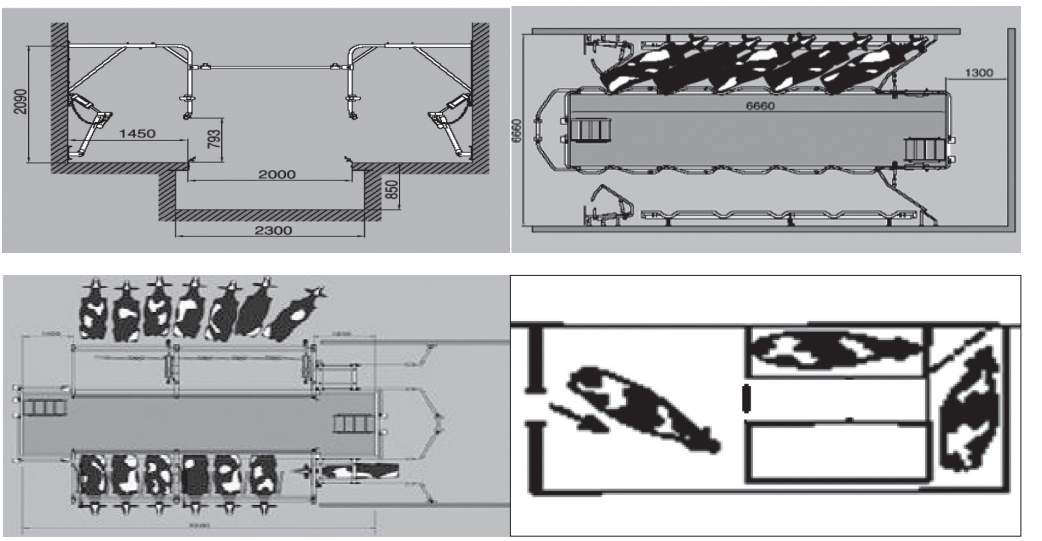

Figure 9.19 Various types of milking parlours

9.9 Calf Barns

One of the important units of the dairy cattle farm is the calf barns. . Certain important issues should be taken into account when constructing the calf barns. The calf barns;

- Should provide appropriate environment conditions to the calves.
- Should be constructed so as to minimize the spread of the diseases.
- Its construction should be simple and cheap.
- Should not make the working conditions difficult.

Dairy cattle farm can build different types of calving houses. However, meeting the above listed issues to a large extent is only possible by constructing individual calf boxes. Individual calf boxes are the boxes that allow each of the calves to be kept separately. These boxes, which can be constructed in various forms, can both be constructed inside of a normal building and can be located in a suitable place in courtyard of the farm or in an area allocated as calf barn. .

Besides the individual calf boxes the details of which are explained briefly, it is possible to mention about the calving houses where the animals are housed in groups. However, the individual calf boxes should be preferred at least during the milk feeding period. Housing the calves in small groups is an application to be recommended for the period following the weaning.

Capacity Determination

The first question coming in front of an enterprise that decided to construct individual calf boxes is how many individual boxes are required. The number of individual boxes required in an enterprise (ICB) depends on;

- Number of cows (N)
- Calving rate (CR)
- In how many months in a year the calving are gathered (M, month) and
- Milk feeding period (MP, month) in that farm..

When the values of above features are known, the minimum value for the number of necessary individual boxes (ICB) can be calculated by the following equation;

ICB= (N x CR x MP) / MA

For example, in an enterprise with 50 cows, if it is considered that the calving rate is 90% (CR=0.90), the births will be concluded in six months (MA=6) and average milk feeding period is two months (MP=2), then the individual box need will be as follows:

ICB= (50 x 0.90 x 2)/6 = 15.

In the same farm, if the births are distributed all around the year, that is, they are concluded within 12 months, the number of boxes required will be 8; and if the births will be concluded in 4 months, the number of individual boxes will be 23. Just in case, it would be useful to have extra calf boxes 10-20% more than the calculated number.

It would be appropriate for calf boxes to be as close as possible to the calving room, to be designed in an easily ventilable way, and to be looking at the southern front if possible.

Calf boxes can be located in single row, double row, triple row or quadruple row. The row number depends on the number of individual calf boxes and the sizes of the calf barn.

Sizes of calf boxes or calf hutches may vary. However, in any case, a calf box should not be narrower than 100 cm and shorter than 120 cm. The appropriate height is 100 cm from the box floor. The floor of the calf boxes can be covered by bricks, concrete or another suitable plastic material, or can be made of grids.

Whatever the material to be used on the floor of the calf box, it would be useful to use straw as bedding material. Nevertheless, in grid-floor boxes, bedding may not be used after the first 1 or 2 weeks.

In boxes other than the ones with grid floor, a 5% slope should be given to the floor of the box towards the manure channel. In grid-floor calf boxes, the height of the grid from the floor should be minimum 25 cm and a 5-10% slope should be given to the concrete floor towards the side to which manure is collected..

It would be fairly appropriate to use wood in construction of the floor grid. Thickness of the wooden material to be used for this purpose should be 5-6 cm; the upper surface width

should be 6-8 cm; and the lower surface width should be 4-5 cm. Grid intervals should not be more than 2-2.5 cm (Figure 9.20). On the floor, plastic-coated metal grids can be used.

One of the important elements of the individual calf hutches is the door. In general, feeds, water and milk is supplied through the doors. If milk is supplied through a teat-bucket, the bucket should be located as the teat is 70 cm higher than the box floor. If calves drink the milk directly from the bucket itself, the distance between the upper side of the bucket and the box floor should be 40 cm. The water bucket should also be placed at the above-said height, or the same place should also be used for supplying water when it is not used for milking.

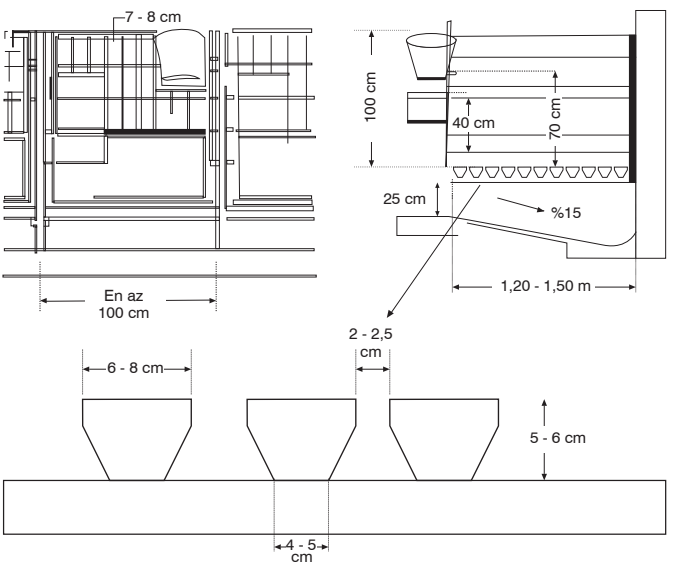

Figure 9.20 Grid-Floor Calf Boxes and Grid Details

Water and milk buckets and the manger should be placed outside the box. To allow calves to drink water or milk from here, a space should be left at the door as high as 35-40 cm and as wide as 35-40 cm. The door-parts other than such spaces should be closed by iron sheets or iron bars at 7-8 cm intervals.

In recent years, studies are conducted to develop cheaper and more practical calf accommodation systems. The common point of all these systems that found some application in Turkey, too, is placing these individual calf boxes that can also be called as calf hutches b on a suitable place somewhere on the yard of the farm. These huts that do not require an extra roof or shelter on are often composed of two parts one of which is indoors and the other functioning as the backyard. Figure 9.21 demonstrates a calf hutch, or commercially-available others, where, just after the calving, calves can directly be taken into and be accommodated until weaning.

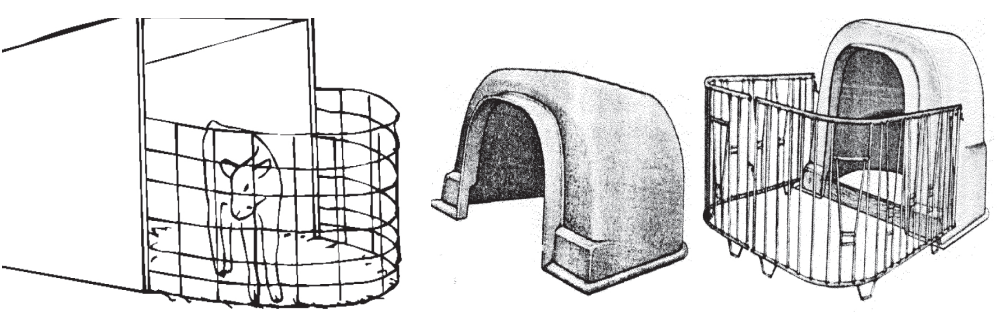

Figure 9.21 Calf Huts

This practice that at the first sight seems to be fairly risky does not pose any risk indeed if calves are fed sufficiently and find plenty of straw there. Calves are not affected by cold weather as adversely as they are thought to be.

As mentioned earlier, such boxes have two sections. The first section is a hutch covered on three sides and completely from the above, and the second section is the yard surrounded by fences. Calves can go into the hutch when it is too windy, cold or hot. In other times, they prefer staying in the yard, which is outdoors and only surrounded by fences. If hutches are not produced as mono-blocks, the side materials can be of wood or fiber-strengthened plastics. On the upper part, that is the roof of the hutch, an atermit type coating material can be used. The fences can be made of iron or wood. Boxes are mostly portable, which enables us to easily rearrange the calf-accommodation area when needed..

In such calf barns, the height of the indoor part should be around 140-150 cm while the height and length of the fences in front of the hutch should be 100 cm and 150 cm respectively.

The fences and the hutch should be designed as mountable to one another. Moreover, it would facilitate both transportation and conservation to produce every element of the calf box separately and portable.

Figure 9.22 Calf Hutches of Various Types

Items to consider when using these cheap, practical and healthy calf boxes, which are very common, are as follows:

1- Boxes should be placed on areas with permeable soil as looking to the south. If the soil is not permeable, it would be helpful to lay sand on the places on which boxes are to be installed at a 5-10 cm thickness.

2- Boxes cannot be cleaned every day. However, at least, it might be needed to lay some bedding material inside the indoor section. Cleaning of boxes is decided by taking into account the situation of boxes. However, rather than daily cleaning, cleaning should be made at the end of the milk-feeding period.

3- Concentrate and hay can be given in both indoor and outdoor sections. However, in general, it is preferred to feed in the outdoor part. Calves should always be allowed to drink water to feed calf starter and hay when they are weaned.

4- During the winter times, water can freeze. Therefore, a small amount of water should be kept in waterers, and early in the morning, waterers should be defrosted to allow calves to drink water.

5- If the calf starter and hay are to be protected from rain and snow, the manger can be covered by a small roof.

6- When calf boxes are placed outdoors, wild animals and dogs might pose a threat, which should be taken seriously and due measures should be taken accordingly.

7- When a calf is weaned , the box should be cleaned and disinfected.

8- Boxes should be re-located when deemed necessary.

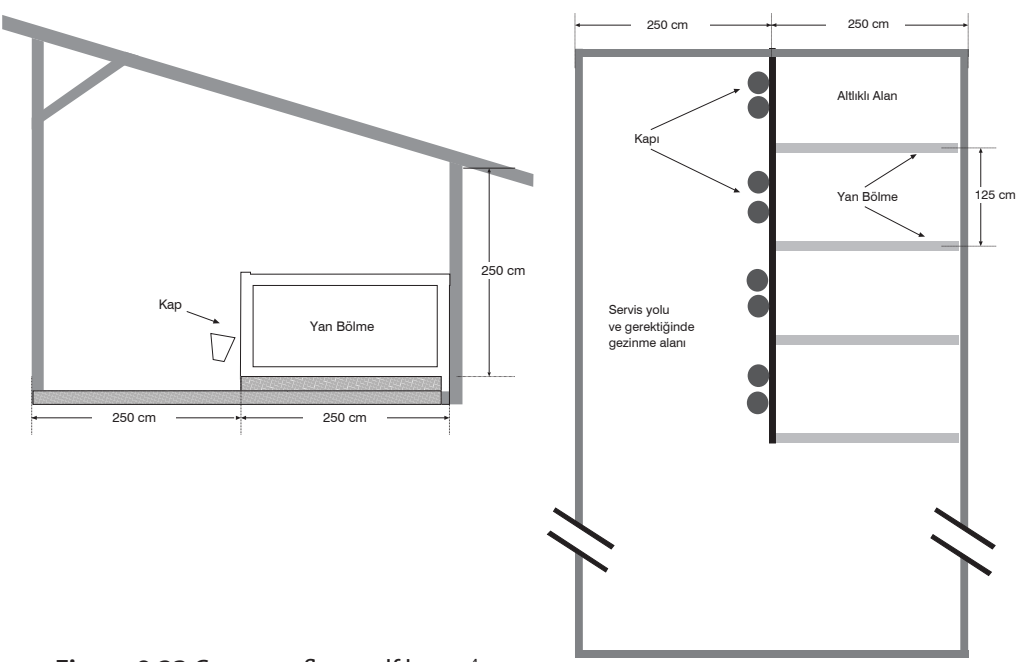

Figure 9.23 Concrete-floor calf boxes[4]

[4] Adapted from Curt A. Gooch, P.E. Newborn Housing for Dairy Calves - 1st in a Series. http://www.ansci.cornell.edu/pdfs/newborn.pdf

Calves can also be raised within calf boxes to be prepared under a relatively small roof (Figure 9.23). In such calf boxes, doors can be established in such a way that there could be independent doors for each box or one door shared by two boxes. If doors are designed to be shared by two boxes and can be opened by calves, it can also be ensured that each door opened functions as a compartment that sets these two calves apart from others. As calves grow, the compartments parting calves from one another can be lifted, and this area can be turned into an area suitable for weaned calves.

9.10 Calving Room

As specified before, an area of 12-16 m^2 with a manger and waterer is needed as calving room (Figure 9.24). The number of calving rooms needed by an enterprise should be calculated by taking into consideration the fact that each cow stays there approximately for 10 days. When calving pens are empty, they can be allocated to young livestock. In such a case, it will be enough to add to the calving pen some manger to meet the extra need.

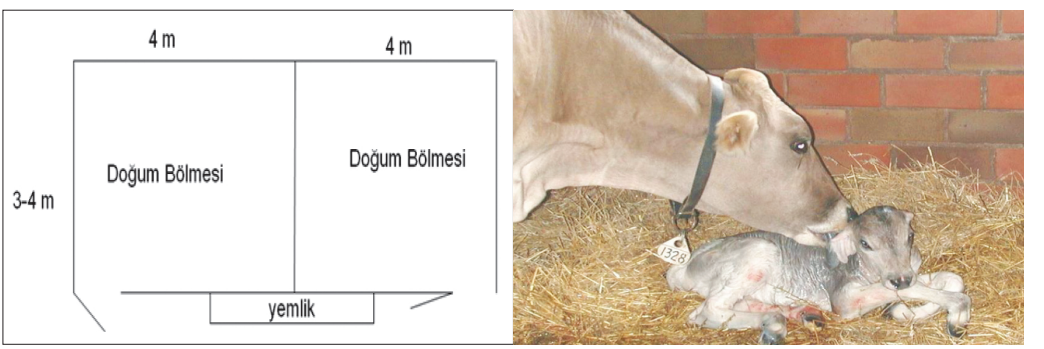

Figure 9.24 Calving Rooms

9.11 Housing of Young Animals

Group Boxes

Calves can be housed in the group boxes both during the milk-feeding period and when they are weaned. As cows are herd animals that like feeding and resting together, group accommodation can accelerate the learning process of calves and have a positive impact on consumption of concentrate feed and hay. Therefore, the rumination activity starts in earlier periods. In the event that sufficient straw is used for bedding, animals will always remain dry and clean.

Although group accommodation has the above-mentioned benefits and gains, it is very common that calves suck one another's body parts such as ears, umbilical cords, and udders particularly before weaning, which results in animal losses or economic damages due to formation of hair-balls in the digestive channels, overextension of udders or infection in

udder lobs. Therefore, cows should be accommodated in individual boxes before weaning whereas in groups after weaning.

Groups should be consisting of calves at similar ages and weight as much as possible. If it is not ensured, weaker cows would be prevented by stronger ones from feeding and their development might therefore be retarded. A group box can accommodate 10-12 heads of animals depending on the floor area and the length of the manger per animal.

In order to have a better observation of animals, it is not wanted that the number of calves in a group be more than the above-mentioned number, and the area per calf be less than 1.5 m^2. In later periods, the box area and the manger length per cap can vary according to the age and weight of the animals.

Weaning – Month 6

Calves should be kept in individual boxes for another ten days after weaning, after which calves are taken into free boxes for 5-20 heads based on the live weight and sexes and taken care of collectively. According to the most recent regulations on animal welfare and animal rights, calves older than 8 weeks should be housed in free zones except for ongoing treatments and some medical precautions. In summary, young animals should not be tethered in anyhow. The boxes in which animals can wander freely can be a separate section within the barn where adult animals are accommodated, or can be built as a detached section independent from the cow barn or as an independent building. Depending on the age of animals, a manger length of 30-50 cm per cap and a waterer per 10-15 animals within each box is needed.

An area of 3.0-3.5 m^2 per animal would be sufficient in barns with concrete floor and free boxes whereas an area of 8.0 m^2 would be sufficient in barns with no concrete surfaces. The cross section of the two structures with concrete floors where young cows can be accommodated in the post-weaning periods was given in Figure 9.25.

Month 6 – Pre-calving Period

Young females can be housed, after the age of six months, in barns similar to the structures given in Figure 9.26. If the barn is to be built as specified in Figure 9.26, it would be appropriate that the service road is 3.0 m, and the resting area where the stalls are to be laid is 4.5 m. The height of the front side of the manger may differ according to the age group. For instance, for a group younger than 6 months, the height of the front side of the manger, which is the height of the upper side of the manger from the floor, should be 35 cm while, as the age increases by 3 or 4 months after the month 6, the height of the front side of the manger should be extended by 3 or 4 cm, up to 45 cm. In the event that the front iron-bars of the manger are mobile, the spaces that might come about as the bars are heightened can be covered by wooden or iron materials.

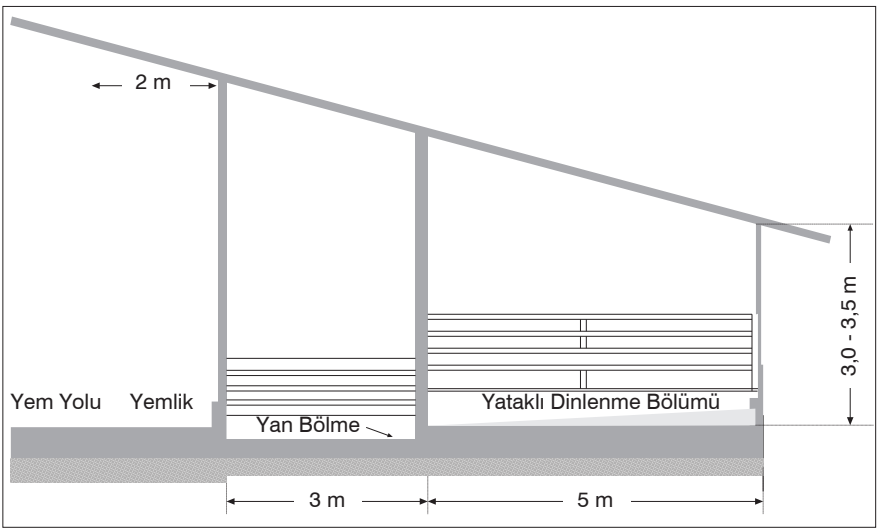

Figure 9.25 Examples for Heifer Barns

If young females are to be accommodated in free-stall barns, the width and height of the stalls can differ according to the size of animals. In order to meet it, stalls in different sizes can be built. However, particularly in small and medium-sized enterprises, it would be more appropriate to install the length and height of stalls in an adjustable style. The height of the stalls can be extended or shortened with mobile panels to be installed on the front side of the stalls. In order to adjust the width of stalls, the side bars should be mobile. The stall sizes for various live weights and approximate ages in which these live weights can occur are given in Table 9.2 based on Figure 9.26.

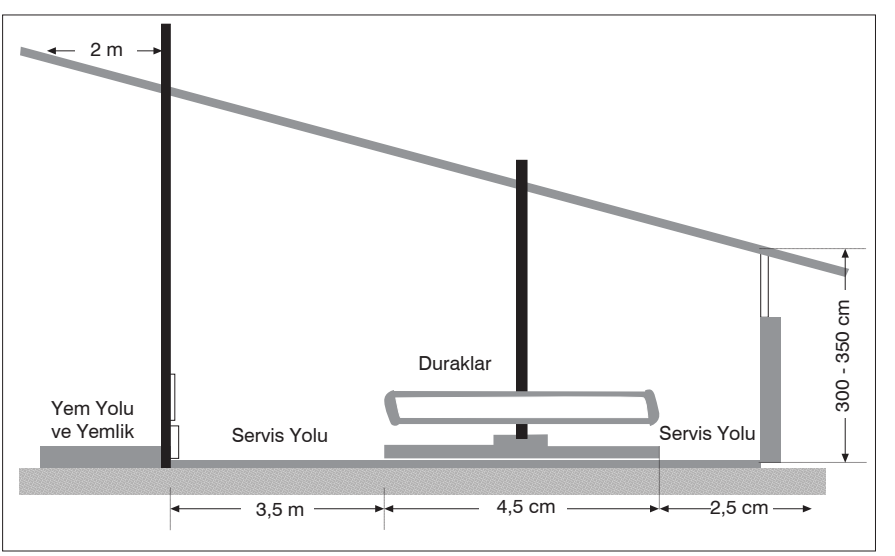

Figure 9.26 A free-stall barn example for young cows and specifications of free stalls

Table 9.2 Sizes of the free stall in Figure 9.26 for heifers in different body weights (cm)

Live Weight	Possible Age	U1	U2	Y1	Y2	A	Stall Width
180-270	6-10 months	150-165	115	80-90	25-30	40-55	80
270-360	9-15 months	170-180	125	90-95	30-40	40-55	90
360-450	14-20 months	180-200	140	95-100	40-45	40-60	100
450-550	18+ months	200-230	160	100-110	40-45	45-70	110-120

The weaned calves and young animals are housed in groups. The pens for these animals should be built in a fairly lean manner provided that they have sufficient areas for manger and waterer. The most appropriate area for raising livestock is the sheltered barns that are covered from the northern side or from three sides. Accommodation in such areas requires very low labor. Here are the issues to take into consideration in preparation of such places.

1- For each animal, a manger length of 30-60 cm would be sufficient depending on the size and way of feeding.

2- For each pen where 10-15 animals can be housed , not more than one waterer is needed.

3- It would be useful to build a concrete floor at the width of 2.0-2.5 m on the part of the manger, which is closer to animals.

4- The front side of the mangers should be 35-50 cm in height.

5- Young animals should not be tethered. Free-raising should be preferred. If the enterprise already has indoor tethering areas, these areas should be organized to allow animals to wander freely, too.

6- An area of 3-10 m^2 (1.5-2.0 m^2 of which should be indoors) would be sufficient per young animal in sheltered barns. When determining the number of animals to be housed in an area, it would be more appropriate to approach the lower limit (3 m^2/animal) if the floor is made of concrete by considering the need for cleaning frequently, and to the upper limit (10m^2/animal) if it is not made of concrete and not to be cleaned frequently.

7- In young cattle-raising units, it would be an appropriate system that can be implemented successfully to build the manure path and the resting area in different heights and thereby to clean only the manure path. Some details of this system are given in Figure 9.26. As shown in the figure, in this system with approximately 10-meter depth, an area of 4-5 m^2 would be sufficient per each animal. In larger enterprises, cleaning can be conducted by means of automated sweepers.

9.12 Manure Management

One of the most serious problems of livestock farming is removing and accumulation of the manure. The seriousness of the problem can be better understood if one considers the annual manure production per animal. A cow with approximately 600-kg live weight produces 35-85 kg manure daily (20-55 kg feces and 15-30 kg urine) depending on the milk yield and ration. This amount corresponds to 6-13% of the live weight of the cow and should be removed from the barn. In addition, the dirty underlay and the water used in daily cleaning should also be removed. In short, manure and other waste produced in an enterprise is always more than the milk production in an enterprise.

A good producer should be in pursuit of removing the manure off the enterprise at the lowest cost and making the best use out of it. Given the fact that the plant nutrition substance content of cattle manure (one tone cattle manure with 10-12% dry matter contains approximately 5 kg nitrogen, 1 kg phosphorus and 3.5 kg potassium) and it has some attributes to rehabilitate the soil, the best way of using it is to utilize it as fertilizer. Cleaning of the manure can be carried out through various methods depending on the barn system and the size of the barn. In dairy farm with limited number of cows, for instance 10 cows or less, urine can be leaked into and collected in a separate place while solid manure can be removed by means of wheel barrow.. Larger enterprises use automated scraper or carriages. Automated scraper is an installation that goes back and forth on a manure path at given intervals as supplied by an electric engine. Wooden or metal wings that carry out the sweeping and carrying function can be built in 15-20 cm high. The motion supplied through the engine is transmitted to the system through chains, or steel ropes. The bearing system moves back and forth. The wings that unfold when moving forth carry the manure and they fold back when moving back (Figure 9.27).

Figure 9.27 Manure Scraper

Another system used in larger enterprises is the grid system. In this system, manure passes through the grid system established on the floor of the barn and accumulates in a collection pool. Depth of the collection pool is around 1.5-2 meters. The manure that is collected here in the form of an almost-liquid form is taken out by means of a vacuum track or naturally if the location of the building is favorable.

Grids should be built out of iron-reinforced pre-tension concrete. They should be in the shape of trapezoid or triangle-section, the wider part that is on the top should be 12.5-15 cm. In trapezoid-section grids, the width of the lower part can be 7.5 cm, and the distance between two surfaces, namely the thickness can be 15 cm. Grids are laid on with a 4-cm interval at the top. In so doing, the width at the lower part is around 9-10 cm, which facilitates the manure to reach the collection pool. If the upper and lower widths are equal to each other (which occurs when grids are rectangular or square-section), it becomes more difficult for manure to fall down, which leads to the failure to achieve the efficiency expected from the grid system.

Dung yards should be established in places where manure can be easily carried and which will not pollute the drinking water. For a cow, approximately a midden volume of approximately 1,5-2,0 m^3 is calculated monthly. An enterprise with 10 cattle, which will unload the manure twice a year, will need a midden with 15-20 m^3 volume per month and 100-120 m^3 in total.

10. CHAPTER

Manure Management

Prof. Dr. Osman YALDIZ

10.1 Introduction

One of the fundamental changes required to be made so as to rationalize the animal production in our country is the implementation of modern, time- and labor-saving mechanization systems. Animal production conducted through contemporary methods is currently an inevitable necessity and the first step of intense animal production. Today, further and more economical production is aimed, which is also evident in the studies related to animal psychology conducted by developed countries, aiming at increasing the production.

Definition of manure mechanization includes the removal of farm manure from the barn, its storage and subjection to physical and chemical processes during storage. Farm manure should be dealt with an input for plant production rather than a waste resulting from animal production. Hence, it is essential to process farm manure through proper methods from the time it is removed from the barn and until it is brought to the field. Thus, it will be possible to prevent environmental pollution and minimize plant nutrient loss.

10.2 Composition of Farm Manures

Chemical composition of farm manure depends on the type, age and feed type of the animal, and may vary as to the raising system applied. For instance, high amounts of bedding used in free circulation barns may result in the obtainment of manure with different content than that obtained from grid-floor barns. Feed residues that may run into the manure also alter its chemical structure.

Antibiotics given to the livestock and liquid materials mixed into the feed (hormone, etc.) increase productivity, but alter the chemical composition of the manure and result in an interceptive effect in aerobic and anaerobic fermentation during storage.

Daily manure production is around 40-65 l/day or 1.2-1.8 m^3/month for each cattle. Daily manure production of chicken is around 175 grams with 40% dry matter content. The following values may be taken into account while calculating the storage capacity:

- Dairy cattle 1.5-1.8 m^3/animal/month
- Beef cattle 1.4-1.5 m^3/animal/month
- Chicken 7. 5 l/ animal/month

Table 10.1 Characteristics of farm manure and plant nutrient material contents [3]

Type of manure	DM[1] (%)	Total nitrogen	NH_4-N (% of DM)	P_2O_5	K_2O	MgO	CaO
Solid farm manure	**kg/ton**						
Cattle manure	23	5,5		3,0	9,1	2,4	
Horse manure	28	4,8		3,1	9,4	2,0	
Sheep manure	37	10,1		5,4	13,2	4,2	
Goat manure	30	8,0		6,0	20,0	1,0	
Rabbit manure	30	18,0		19,0	45,0		
Duck manure	30,0	4,0		3,0	11,0	1,0	
Goose manure	30	8,0		6,0	11,0		
Turkey manure	49	17,5		18,6	16,2	7,0	17,2
Chicken manure	30	30,3		21,8	20,9	10,4	34,1
Poultry	**kg/ton**						
Fresh chicken manure	30	17,3	4,6	12,4	10,0	6,3	34,5
Dry chicken manure	50	26,2	9,4	20,1	18,1	8,7	46,0
Dried chicken manure	70	32,4	9,8	28,0	24,0	19,4	57,7
Liquid farm manure	**kg/m³**						
Dairy cow and cattle	6 8 10	3,2 3,9 4,6	1,8 2,2 2,5	1,4 1,7 2,1	3,9 4,6 5,2	1,0 1,3 1,5	
Bull manure	7 10	3,8 4,7	2,2 2,6	1,8 2,2	4,0 4,9	1,1 1,5	
Calf manure	2	2,8	2,3	1,2	3,3	0,5	
Chicken manure	11	7,8	4,8	5,8	4,5	6,0	9,5
Sewage	**kg/m³**						
Cattle	1,5	1,1	0,8	0,2	3,4	0,3	

DM= Dry Matter

10.3 Characteristics of Farm Manure

Some characteristics of manure should be known in order to decide on the methods to be employed while storing, handling and processing of farm manures. Dry matter content and particle size affect the flowability, hence, processability of manure. Organic dry matter content and degradability restrict the success of microbiological processing methods.

Amount of manure: It is the amount of manure produced within the enterprise within a given period. It depends on the type and age of the animals. The type of feed and amount of water given to the animals also affect this amount.

Dry matter: Amount of dry matter contained in the manure depends on the enterprise, type of the animal, raising system, type of feed and amount of water. Dry matter content is influential on the selection of storage and processing systems. Furthermore, the type of transportation vehicles should be selected in accordance with the dry matter content of the manure.

The generally accepted definition of liquid manure is that it is the manure containing a mixture of urine and faeces with up to 15% dry matter content, obtained when 0.5-1.0 kg/day bedding is used for each cattle.

Organic dry matter: Organic dry matter constituting a major portion of the dry matter varies depending on the above-mentioned criteria. Cattle manure contains organic matters that are less degradable than poultry manure.

Biochemical oxygen demand (BOD): It is the amount of oxygen required to degrade the organic matter completely. This value also represents the biologically degradable amount of organic pollution of the manure.

Density: It is around 1450 kg/m^3 in cattle manure and 1800 kg/m^3 in chicken manure.

Flowability: Ideal flowability may be attained if the dry matter content is below 5%. As the viscosity rises, it becomes more difficult to transmit the manure through the use of a pump. Limit values for transmission through pumping are 12% for cattle manure and 16% for chicken manure.

10.4 Farm Manures and Environmental Problems

Animal faeces in shelters and in their surroundings could cause substantial environmental pollution. This pollution is summarized in Figure 10.1. It may be examined under two headings:

1. Air pollution
2. Soil and water pollution

10.4.1 Air pollution

It is important particularly in the systems where the manure is inside the barn or in another environment in liquid form. Quality of barn air may vary depending on the type,

amount and content of the manure. Large amounts of toxic and detrimental gases (H_2S, NH_3, CO_2, and CH_4) are liberated into the environment particularly when the manure is put into motion (mixing and cleaning). Such gases that have a toxic effect during the removal, cleaning, mixing and waiting processes of the manure lead to serious injuries and even death in high concentrations. [6, 8, 12]

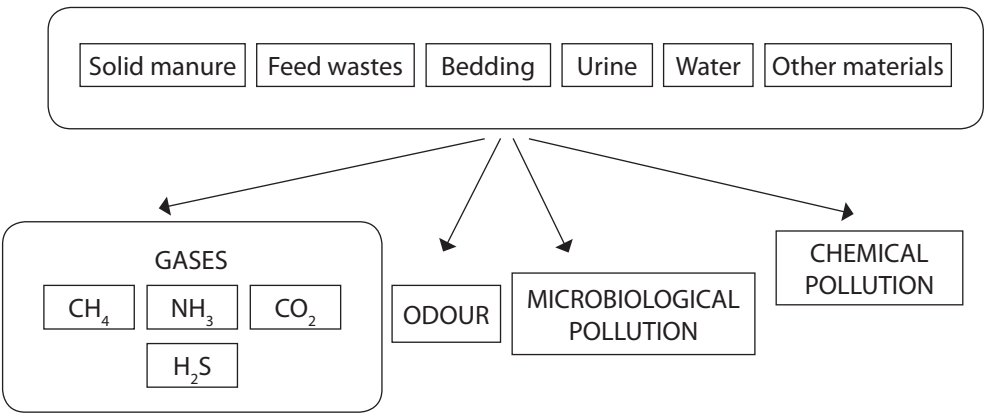

Figure 10.1 Environmental pollution arising out of farm manures

Ammonia gas causes itchiness on skin and respiratory difficulty. Increase in ambient temperature accelerates its formation. Optimum pH range for the formation of ammonia is between 7.8 and 8.8. If the ambient air is saline, this will increase the amount of ammonia suspended in the air. Therefore, it will be easier for the gas to reach the lungs through the breathed air, leading to its detrimental effect getting more serious [7, 8]. Carbondioxide increases the heartbeat at 30,000-ppm level. It causes unconsciousness at 150,000 ppm and leads to death if it is higher than 200,000 ppm [7, 9, 11]. Hydrogen sulphide is a colorless and toxic gas that smells like rotten egg. At concentrations above 700 ppm, it causes respiratory difficulty and may lead to death. It causes itchiness in the eye and respiratory tract between 50-100 ppm, paralysis in olfactory organs at 200 ppm and nausea, vomiting and unconsciousness at 500-700 ppm level [7, 9, 11].

10.4.2 Soil and water pollution

Manure stored under uncontrolled conditions in livestock enterprises may give rise to substantial soil and water pollution. Liquid manure storage systems, which have been more commonly used in the recent years, have many beneficial aspects but are disadvantageous in the sense that they do not allow the disappearance of disease factors through spontaneous heating in contrast to solid manure (if supplementary systems are not used). Disease factors may be eliminated through the use of supplementary systems (aerobic processing).

Diverse studies revealed that there are 79 different bacteria and parasites emanating from domestic animals. Their lives vary between 5 minutes and 930 days [13].

Pollution occurs in the form of upper surface run-off, washing away and gas formation while storing, processing and applying the manure into the field. NO_3 formation causes pollution during washing away, whereas in gas form, NH_3 loss occurs (Nitrogen loss under special soil conditions occurs also in the form of denitrification)

Processing and application technique with insufficient storage capacity prevents fertilization at the optimum period for the plant. Therefore, measures preserving ecological balance are required to be implemented from the time the manure is removed from the barn until it is used in vegetative production.

Redundant or improper use of manure in agriculture results in a significant increase of nitrate in soil and groundwater. In the periods when no plants exist on the soil surface or the existing plants do not require much nutrition, NH_4-N^+ rapidly transforms into nitrate through nitrification. Nitrate is washed away with water, which causes it to reach to the groundwater.

Nitrogen loss through the formation of ammonia directly and indirectly influences the chemical, biological and ecological balance. Storage of ammonia and ammonium compounds results in the alteration of the water chemistry, destruction of wild life and death of water organisms and fish. 70% of nitrogen loss occurs after the application of the manure into the field, 30% occurs during storage and 5%-15% occurs during application into the field.

Through the implementation of the following measures, it will be possible to prevent, to a considerable extent, the environmental pollution outlined above.

1. Manure should definitely be stored in leak-proof and sealed tanks.
2. If the manure is not subjected to any processing, it should be stored for at least three months. Thus, odour and environmental pollution will be precluded to a certain extent.
3. Ducts inside the manure tank in liquid manure systems and in the barns should definitely be sealed with a cover at normal times. Thus, the connection between the tank and barn will be cut off and the diffusion of toxic gases and odour into the barn will be prevented.
4. Only disinfected (through thermal or chemical methods) manures should be allowed to be used in areas that are 500 m away from, or closer to, residential areas.
5. If the manure produced within an enterprise has no area of use in the enterprise, then it should definitely be rendered totally harmless and disposed of in a manner that is not detrimental to the environment.

Odour, noise and dust generated in livestock enterprises are other pollution factors adversely affecting the vicinity of the enterprises. Particularly in cases where dust and odour exist together, odour-generating materials hold to dust particles and are drifted by the wind and carried away. The odour stems from the shelter air, manure tank and manure applied to the field.

10.5 Manure Removal Systems

Taking out the manure from the shelter and putting it into storage is called manure removal. The mixture of solid faeces and urine obtained in consequence of animal production is called manure, and it should be stored after being taken out from the shelters. Methods employed for removing from shelters, transportation and storage of the manure may vary depending on the dry matter content of the manure. In general, manures with 15% or less dry matter content are called liquid manure, whereas manures with a higher dry matter content are called solid manure. While the transfer of liquid manures from a point to another point may be carried out through the use of pumps, different methods are used for solid manures.

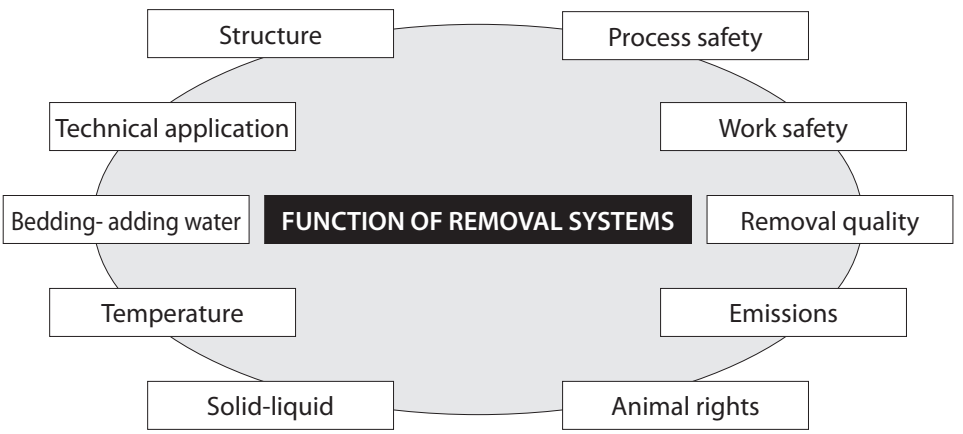

Figure 10.2 Considerations required to be taken into account in the selection of manure removal systems [13]

Considerations required to be taken into account in the selection of manure removal systems are outlined in Figure 10.2. For structure arrangements, the applicable building legislation and environmental protection legislations should be taken into consideration. Work safety and work quality of the system, emissions that will occur while the system is operating, animal rights and health, solid-liquid phase separation, climatic conditions of the region, bedding use and technical availability are other issues required to be dealt with.

10.5.1 Solid Manure Removal Systems

Systems used to remove solid manure from shelters generally bear a significant resemblance to each other. Manure in manure ducts and areas where the livestock are located is scraped and collected at a certain point. This is done with the use of scrapers. The distinction between scrapers called with different names is their structures and motion systems. These scraping systems are illustrated and summarized below with their essential features.

Manure Propelling Systems

The system called foldable scraper is demonstrated below. While the scraper is pulled by ropes, the manure on the ground is completely scraped by virtue of the pressure made

by ropes downwards. While moving backwards following the scraping process, the scraper is made parallel to the floor in order to avoid scraping back. Hot dip galvanization of all metal parts will prevent corrosion.

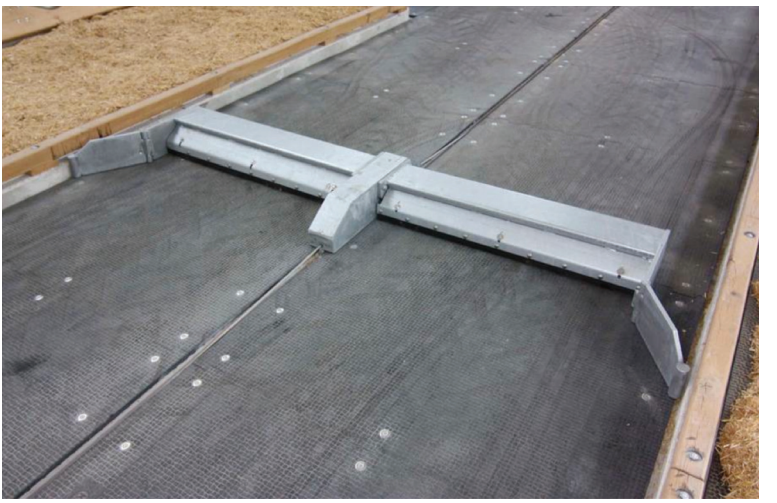

Figure 10.3 Foldable scraper [4]

The system can be put into motion by the use of a rope or chain. Chain systems are more advantageous in the sense that they respond better to changes in direction, are resistant against freezing, and more economical. Yet, their greatest advantage is that they have a higher propelling force and a longer economic life. Nonetheless, chain systems used in barns with huge lengths are prone to be damaged if they are weak because a huge amount of force will be needed.

Figure 10.4 While the foldable scraper is operating [4]

Figure 10.5 Roaming area scraper [4]

The scrapers described above may also be used in the roaming areas of livestock (Figure 10.5). They do not have any restriction regarding their width. They can be manufactured in the desired width.

In order to extend the economic lives of the systems, anti-corrosion measures should be taken, an appropriate level of force should be applied, changes in direction should be minimized, freezing in the duct should be prevented and metal parts should be kept away from salt if the animals are being fed with salt.

Removal mechanisms with chains

In the removal mechanisms with chains, motion is conveyed to scrapers by chains. The primary distinction of these mechanisms is that the scrapers are suitable numerous changes in direction and level.

Figure 10.6 Removal mechanisms with chains [4]

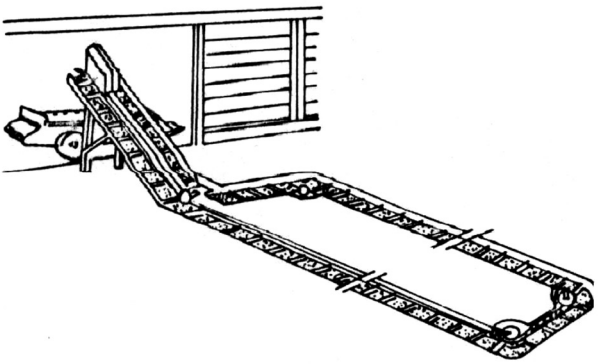

Figure 10.7 Removal mechanism with chains [16]

As seen in Figure 10.6, the scrapers coming out of the shelter are elevated and can be conveyed to a trailer or a storage area. In the case that the duct proceeds outside the barn, manure may freeze during winter months in cold climate regions. In order to avoid this, the manure should not be diluted, the system should be operated again for a little while after the removal process and particularly the sections excluding the barn should be cleaned thoroughly.

Length and duct width of the system are not restricted. Duct width may be up to 300 cm.

Mole Type System

It is a solid manure removal system that has been quite widespread in the recent years and is also called pressure system. Manure can be conveyed to 100 m distance through underground ducts and tubes. It can be combined with other solid manure removal systems. Duct width should be between 35 cm and 40 cm. Transmission tube may be PVC or concrete. Steel tubes may be used at spots posing a risk of rupture along the transmission distance. Section of the transmission line is circular or square. Piston pressure may vary between 5 and 35 tons.

Infinite number of changes in direction can be performed along the transmission line. The duct may be narrowed down 10 cm where required. Problems may be encountered in the transmission of too diluted or too solid manure. Transmission of chicken and horse manure is tough. For 90° changes in direction, twice 45° changes are recommended.

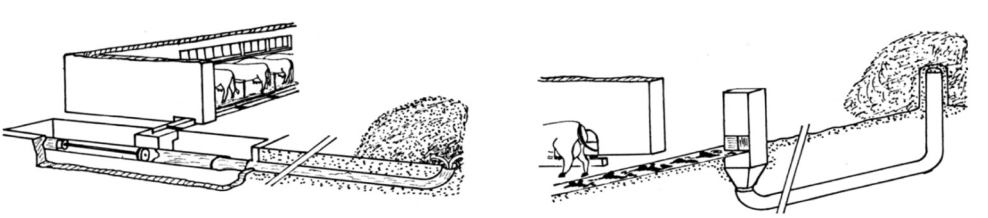

Figure 10.8 Mole type systems [16]

In the case that solid manure is stored on a liquid-tight floor, elevator conveyors illustrated below may be employed. Their height is set according to the amount of manure required to be stored in a given time. In other words, the volume following the storage process is calculated to determine the height of the peak point of the conveyor.

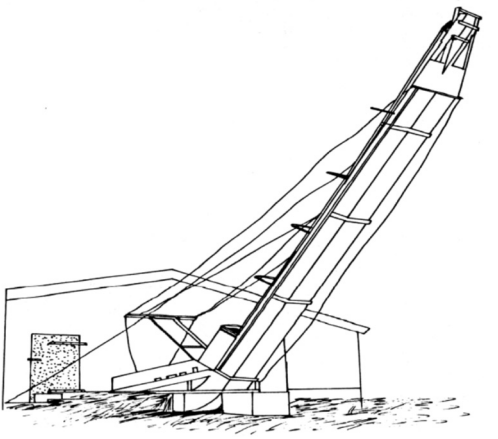

Figure 10.9 Solid manure storage conveyor [16]

10.5.2 Liquid Manure Removal Systems

Sliding System

Manure is transmitted through a duct below the barn to a second duct located at a lower level and extending along the long side of the barn, and then conveyed to the manure tank. An obstacle exists at the point of intersection of the two ducts below the barn. By the help of this obstacle, the flow of the liquid part of the manure into the second duct is hindered partially. Thus, liquid phase and solid phase are separated. Such manure removal systems are convenient for dairy farm barns, which have bound and free stops as well as for barns where fattening cattle are raised.

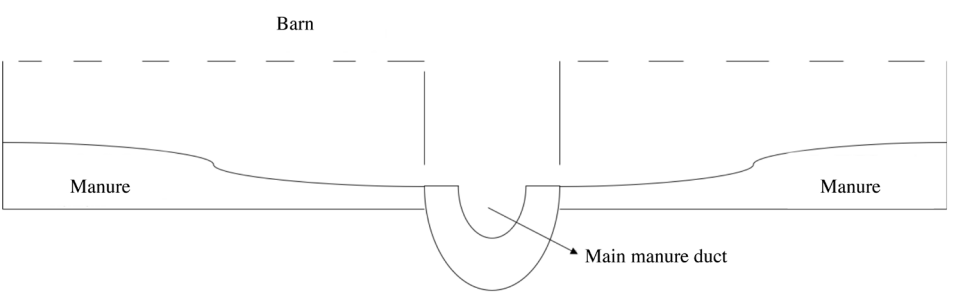

Figure 10.10 Sliding system

Manure flowing from the grid floor of the barn accumulates in the ducts below the barn. A 15 cm high obstacle exists at the point where the ducts are linked to the main duct, assisting the solid part of the manure to flow into the main duct in the course of time. The liquid part dribbles down and accumulates in the lower part of the duct. A simple illustration of the system is demonstrated in Figure 10.10.

Duct width should be at most 160 cm. Its depth depends on its width, and its length may be up to 25 m. Duct section is square and conic. No change in direction or narrowing down in the duct section area is allowed along the duct. It is recommended that the water source required to wash the duct is placed at the beginning point of the duct. Toxic gases may be liberated while washing the duct with water.

Flushable System

Flushable system, one of the liquid manure removal systems, is based on the principle to accumulate the liquid manure in a tank and pump it with pressure through the ducts at certain times, and then flush the ducts (Figure 10.11). Liquid manure in the front tank (tank 1) is pumped and conveyed to the ducts below the grid floor by the help of flushing pipes, and the ducts are flushed. In the case that the front tank is filled, the same pump is used to convey the liquid manure to the main tank (tank 2).

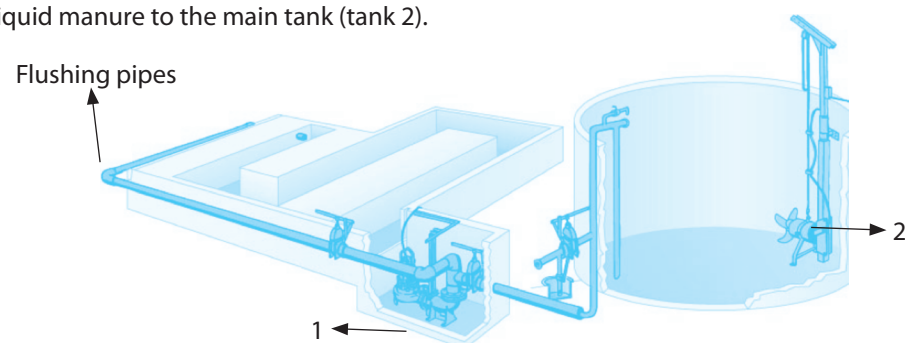

Figure 10.11 Flushable liquid manure removal system [1]

Storing Under the Barn

Manure is stored in the tank below the grid floor barn and stirred in an effort to prevent stratification. This system does not require any additional expense for a manure tank. Manure removal task is carried out more easily. Nitrogen loss is less. As the manure generally undergoes anaerobic fermentation, plant nutrients loss is at a lower level. However, the location of the manure tank below the barn may damage the structure if water insulation is inadequate. General principle of the system is demonstrated in Figure 10.12.

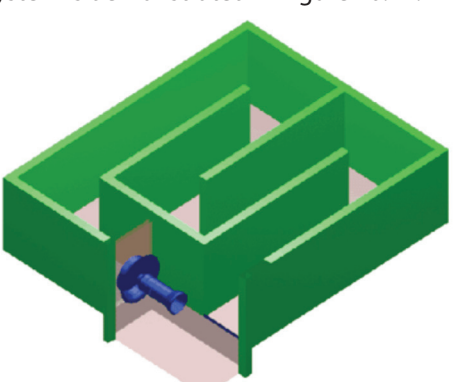

Figure 10.12 Under-barn storage systems [2]

10.6 Storing Farm Manures

Storing the liquid and solid manures of the enterprise under controlled conditions is of great importance in the sense that it prevents environmental pollution and ensures that manures will be used in a more beneficial way when the plant nutrient loss is minimized. Benefits of storage under appropriate conditions may be outlined as listed below [10]:

- Stored manure is richer in terms of plant nutrients. Losses during storage occur in the form of losses in organic compounds that do not contain mineral nutrients and nitrogen.
- If storing is not performed under controlled conditions, a great loss of nitrogen will occur.
- If flushing is not performed during storage, phosphor and potassium that dissolve during storage are not lost.
- When stored, manure's C/N ratio escalates to 20:1. A high C/N ratio in fresh manures leads to nitrogen deficiency in plants.
- Weed seeds and disease factors in the manure can be eliminated through some processes to be applied during storage.
- Approximately 50% of plant nutrients are in liquid manures. Plant nutrients in liquid manure are more beneficial.
- 50% of nutrients contained in the manure stored in the open are washed away and lost during a storage period of 6 months.
- If the manure is stored in the open, urea and other nitrogenous compounds generate large amounts of ammonia. Mostly, ammonium carbonate and bicarbonate are generated in the first stage of decay. Since these ammonium compounds are not stationary, ammonia is lost in the form of gas. Ammonia loss increases as the ammonium carbonate concentration and temperature rise.

Ammonia loss is less at normal temperatures and pH values of 7 or slightly below 7. High temperature caused by the decay in loose manure heaps accelerates the ammonia loss. Likewise, crystallization of water and increase in the concentration of the solution due to freezing escalates the ammonia loss.

- Organic matter loss generally occurs through the degradation of carbohydrates. The weight loss in manure is due to the loss of organic materials.
- Loss of phosphor and potassium in gas form is very low.
- Another way of minimizing the loss during storage is to use chemical materials. Thus, urea and other nitrogenous compounds are transformed into non-volatile salts.

Acids such as phosphoric, sulphuric and hydrochloric acids are effective preservatives. Reaction in the manure is acidified to prevent the degradation of urea, leading to the transformation of ammonia into non-volatile salt compounds. Phosphoric acid fits better for this process. Thus, manure is also enriched in terms of phosphor.

$CaSO_4$, $CaCl_2$ and $Na(NO_3)_2$, among calcium salts of strong acids, prevent nitrogen loss. Calcium sulphate reacts with ammonium carbonate to yield $CaCO_3$ and $(NH_4)_2SO_4$. Ammonium loss does not occur if the manure contains an adequate level of humidity. However, when the manure dries, the reaction is reversed, leading to ammonium loss.

Generally, superphosphate with 16-18% P_2O_5 content is used. 30-50 kg superphosphate is added into a ton of manure. Plant nutrients loss decreases by 19% in a manure preserved by this way.

The criteria required to be taken into account while calculating the volume of the manure tank are the number of livestock and the type of the manure removal system. As a general approach, the amount of manure to be obtained from one animal may be computed with the following formula:

Amount of faeces= Amount of dry matter in the feed given to the animal x 3 x number of livestock

Another criterion required to be taken into account regarding the volume of the tank is the storage duration of the manure. This duration may vary depending on the plant production pattern of the enterprise, conditions in the enterprise and, legal obligations.

Figure 10.13 Concrete and steel tanks for liquid manure

The tank volume should be computed taking into consideration the maximum capacity of the enterprise. Expansion of the tank may be impossibly difficult both in the technical and economic sense. Liquid manure may be stored in tanks made of concrete or steel (Figure 10.13). Manure tanks made of steel should definitely be protected against corrosion.

10.7 Liquid Manure Mixing Mechanisms

The stored liquid manure needs to be mixed in order to maintain its homogeneity in the tank. Particles less dense than water accumulate on the upper section, whereas those denser than water subside and accumulate on the bottom. During storage, while the gas generated through anaerobic fermentation moves towards the upper section, it carries the particles to

the upper surface of the tank. The manure remains at liquid phase at the middle section of the tank. In order to avoid this, the tank content should be mixed with appropriate mechanisms. Non-homogenous material is very tough to stir.

Mixing systems are divided into three groups: mechanical, hydraulic and pneumatic. Mechanical mixers are driven by an electric motor or thermo motor. This system has also some types that are driven by a power take-off. Hydraulic mixers are systems that take the liquid manure from the tank and send it back to the tank through pressure. Pneumatic mixing is carried out by the air sent from the lower part of the tank with pressure. However, this system is not commonly used in practice except for aerobic manure processing tasks.

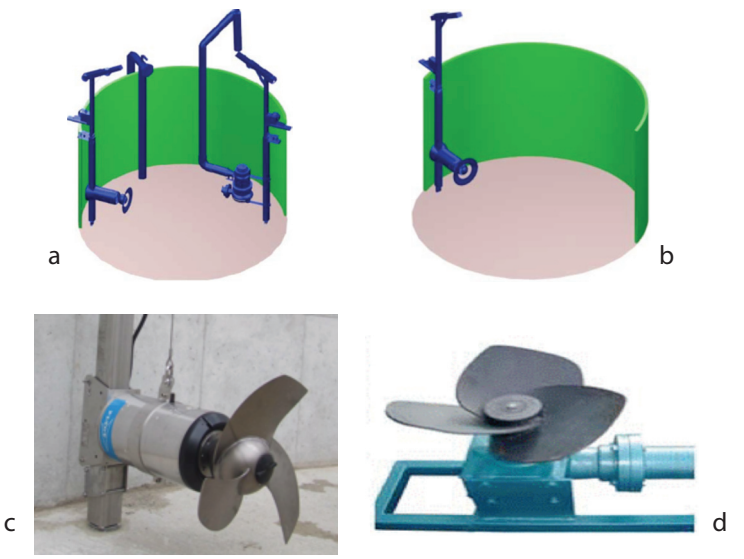

Figure 10.14 Mechanical manure mixers [2, 5]

a-mechanical mixer+pump combination **b**-mixer **c**-plunging mixer **d**-propeller mixer

10.8 Liquid Manure Processing Systems

Subjection of farm manures to chemical and physical processes during storage should be dealt with as an application that preserves plant nutrients in the most proper way and prevents environmental pollution to a considerable extent. Due to such concerns, manure should be used only after reacting with air, being composted, undergoing methane fermentation (biogas production) and being subjected to drying process. Methane is obtained as an energy source from methane fermentation. When the manure reacts with air (aerobic processing), it may be disposed of into the nature in a clean state. Liquid manure processing methods are shown in Figure 10.15.

Subjection of liquid manure to air or pure oxygen is called aerobic processing. Thanks to the high temperature caused by fermentation, both harmful microorganisms are destroyed and organic compounds are degraded so that the future odour problem is resolved.

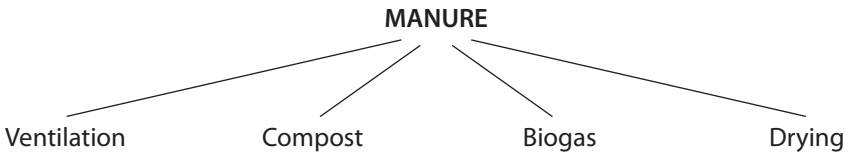

Figure 10.15 Liquid manure processing systems

In enterprises that do not have a sufficient agricultural land to use the farm manure, the subjection of the manure to some processes in an attempt to reduce the amount of manure required to be stored and prevent environmental pollution is an unavoidable obligation particularly for large livestock enterprises.

Numerous applicable systems have been established with different combinations comprising different systems. This section only deals with those that are easily applicable and cause minimum environmental pollution.

10.8.1 Aerobic Fermentation

This process is based on the principle that manure reacts with air or oxygen. The primary criterion required to be taken into account in the selection of ventilation systems, which have various types, is the dry matter content of the manure. Large grained feed wastes that may exist in the manure hinder the effective operation of the ventilation system. While ventilating chicken manure, it should be diluted; otherwise transmission will be impossible whether through stirring or pumping.

A proper amount of air (oxygen) should be given to the fermentation environment in order for organic materials to reach a high level of decomposition by the help of microorganisms. The air sent into the liquid manure is used rapidly. While stirring the manure constantly, the air absorbed from the surrounding environment is blown into the manure. There are systems operated with pure oxygen as well; however they are not used in practice. The amount of air required to be sent into the manure depends on some factors. A redundant amount of air is not economical.

10.8.2 Solid-Liquid Phase Separation in Farm Manures

Separation of liquid and solid phases in manure farms is particularly essential for enterprises that have numerous livestock but do not have sufficient agricultural lands. Ventilation of manure whose solid phase has been separated is easier, and the amount of energy spent during ventilation is lower. Solid matter accumulation on the upper surface and bottom part of the manure would be far less. The tank volume required would be reduced. Manure application would be easier with the use of sprinkler systems. Solid part may be made use of as compost or sold as organic manure after a certain waiting period if legal arrangements are done.

10.8.3 Biogas Production from Farm Manures

Main purpose of biogas production is to generate environment-friendly energy, which can be easily transformed into thermal, and electricity power. Yet other purposes, which are as important as the foregoing, are to ensure that organic wastes are stored under controlled conditions, provide a refining effect, resolve to a considerable extent the odour problem arising out of organic wastes and facilitate the use of organic manure in agriculture. As biogas is produced indoors, the loss of nutrients, particularly nitrogen, is reduced significantly.

Purposes of biogas production may be summarized as follows [17]:

- Obtaining quality energy,
- Reducing odour,
- Mitigating the corrosive effect of manure,
- Enhancing the flowability of manure,
- Reducing the amount of methane and ammonia in the atmosphere,
- Minimizing the plant nutrients loss,
- Preventing nitrogen from being washed away,
- Enhancing the usefulness of plant nutrients,
- Useful for plant health,
- Disinfection of organic matters,
- Attenuating the germination capability of weed seeds,
- Assisting in the solution of organic solid and liquid wastes problem

There are numerous factors that are influential on biogas fermentation and dependent on each other. They affect the fermentation process during production and influence the amount and content of the gas generated. These factors are summarized below [14]:

Raw material

- Type
- Content
- Dry matter and organic dry matter ratios
- Amount of bedding contained
- Particle size
- Foreign matter ratio

Digester

- Volume
- Material used in the construction (concrete, metal, etc.)
- Mixing
- Loading and unloading system
- Heating mechanism
- Isolation
- Location

Process parameters

- Loading ratio
- Dry matter and organic dry matter ratios
- Retention time
- Fermentation temperature

Biogas can be produced from all materials with organic content excluding livestock manures. It is commonly produced from the mixture of manures with high gas yield and plant wastes (co-fermentation). Characteristics and gas yields of various materials are given in Table 10.2.

Table 10.2 Contents of some organic materials [11]

Material	DM (%)	ODM (%)	N_{tot} (%)	NH_4-N^+ (% -Ntot)	P_2O_5 (% DM)	K_2O (%DM)	C/N	Gas (l/kg.ODM)
Cattle manure	6-11	68-85	2,6	39-60	0,5-3,3	5,5-10	10-17	200-260
Chicken manure	10-29	75-77	2,3-6	69-70	2,3-6,2	1,2-3,5	7	200-400
Sheep manure	25-30	80	3	35	1,2-1,7	2,7-4,8	14	400-500
Horse manure	28	75	2,1		1	1,8	18	300-400
Grass silage	26-82	67-98	3,5-6,9	6,9-19,8	0.38-0.76			500
Grain straw	85-90	85-89	0,5		0,2-0,4	11-2,3	70-165	300-600
Corn straw	86	72	1,2		0,5	1,7	30	600-700
Beet leaf	15-18	78-80	2,0-2,5		0,5-1,1	4,0-4,7	15-16	400-500
Potato leaf	25	79	1,5		0,5	2,9	16-25	500-600
Apple waste	2-3,7	94-95			0,73		6	300
Potato waste	12-15	90	5-13		0,9	6,4	3-9	330
Wheat waste	3-5	96-98	6-9,9		3,6-6,0			
Molasses	10,5	71,2						
Grape waste	40-50	80-95	1,5-3,0		0,8-1,7	3,4-5,4	20-30	
Brewing wastes	21-15	66-95	4,0-5,0		1,5	1,2	9-10	800
Milk industry wastes	4,3-6,5	80-92	0,7-1,5	20,3	0,8-1,8		27	
Vegetable wastes	5-20	76-90	3-5		0,8	1,1	15	400
Oilseed wastes	92	97	1,4		0,3	1,2	41	
Rapeseed processing wastes	88	93	5,6		2,5	1,6	8	
Bio-garbage	40-75	30-70	0,5-2,7	7	0,2-0,8	0,3-0,8	25-80	200-600
Grass	11,7	87-93	3,3-4,3		0,3-2	2-9	12-27	600
Animal flour			8-12		2-5	0,3-0,5	2,5-5	
Blood flour	90	80	12	0,6	1	0,6	4	
Kitchen wastes	9-37	74-98	0,6-5,0	1,5-22	0,3-1,5	0,3-1,2	15-21	500-700

Figure 10.16 A modern biogas plant [15]

10.8.4 Composting from Farm Manures

Compost is basically a product obtained through the microbiological fermentation of organic material under aerobic conditions. Although it has certain rules regarding the duration, control and temperature level of the process, the product obtained may vary depending on the method applied. Hygiene has an important place in the selection of the method. The material as well as temperature and duration of the process are significant factors for obtaining a hygienic product.

Since the reduction of particle size will accelerate the microorganism activity, the material should be downsized and the pore space should be increased in accordance with the requirements of bacterial activity. It is recommended to mix shredded tree and branch pieces into the material in order to increase pore space. Materials those are not proper for composting should be removed from the waste. Metal pieces may be removed from the material through the use of magnetic separators, whereas other unwanted pieces may be detected and removed through labor or mechanical and pneumatic systems.

Compost production consists of various steps as specified below.

1. Raw material procurement
2. Preparation for fermentation

   Removal of foreign materials

   Removal of metals

   Sieving

   Downsizing

   Mixing

   Homogenizing the material

3. Fermentation
   Forced ventilation
   Inverting
   Keeping in the open
4. Preparation for sale
   Cleaning
   Uniform particle size
   Removal of hard bodies
5. Marketing

Although the techniques employed are different, all facilities should pay regard to the following considerations:

- High quality compost production
- Optimum level of facility operation safety
- Minimum environmental pollution
- Production with minimum costs

Suitability of some materials that can be added into farm manures for composting process is discussed below.

Cattle manure basically an appropriate material for composting. As the carbon ratio is high, a nitrogen-rich material is needed in the mixture. It is generally hard to use cattle manure as is taken from the barn. Thus, it is put into a separator and the liquid part is removed, obtaining a dry matter ratio of approximately 60%. This humidity level is convenient for the composting technique.

Poultry manure has high nitrogen content. By virtue of its physical nature, it is impossible to transmit it through the use of a pump without diluting it. If it needs to be transmitted with a pump after being removed from the poultry house, it should be first diluted and then put into a separator. It should be mixed with carbon-rich materials in composting as it has high nitrogen content. Its plant nutrients content is high as well. Odour problem is more serious in comparison to cattle manure. It has a high pH value and is alkaline. It has generally high salt content. Farmers should be careful while applying it to salty soils.

Other livestock manures are suitable for composting. However, the material should be analyzed in terms of C/N ratio and mixed with other materials accordingly. Odour problems are less serious as compared to chicken manure.

Plant wastes are generally used as a nitrogen source and pore creator in the composting of all livestock manures. They are effective in balancing the C/N ratio and mitigating the odour problem. All vegetative wastes are suitable for composting. Dry vegetative wastes generally have a high carbon ratio. Wastes arising out of plant production, marketplace wastes, food

industry wastes, leaves, wood chips, barks and grass are included in this category. Among these, grain straw is a very good nitrogen retainer. Thus, it is particularly preferred in compost material. Additionally, it creates pores inside the material. Barks and wood chips do not have much influence on fermentation. However, they are recommended to be used in the mixture, as they are carbon sources and can create pores. Grass is rich in terms of nitrogen. Pest problems may be encountered while using food industry wastes. The risk of containing harmful materials should be taken into consideration while processing them. Particularly slaughterhouse wastes are hazardous in this respect. They also pose a serious odour problem.

References

- http://www.bfl-online.de/media/sir1011.pdf (14.01.2012, 22.12)
- http://www.flygt.de/42851.asp(14.01.2012, 23.45)
- http://www.landwirtschaftskammer.de/landwirtschaft/ackerbau/duengung/basisinfos/wirtschaftsduenger-pdf.pdf (12.01.2011, 14.30)
- http://www.stalleinrichtung.it/03c19898d10d89c04/03c1989ab40db2113/index.html (14.01.2012, 22.12)
- http://www.schauer-agrotronic.com/stalleinrichtung/guelletechnik-entmistung/ (14.Ocak, 2012, 23.00)
- http://www.woelfleder.at/typo3/index.php?id=22 (10.01.2012, 15.45)
- DIEKMAN,L., 1983, Schadgasse aus Flüssigmist.RKL.4, p.839-885.
- HAMMER,K., WITTRACH, B., KELLER, G.,1982. LebensgefaerlicheGasseausdemFlüssigmist.DLZ.4, S.509-513.
- IRPS,H.,1982. SchadgassmessungenimGüllebereich. Die LandtechnischeZeitschrift 3. p.326-327
- KAÇAR,B. 1986. GübrelerveGübrelemeTekniği.ZiraatBankasıKültürYayınları, Nr.20.
- KUHN, E.,1995. Kofermentation, Arbeitpapier. 219 Hrsg.KTBL, Darmstadt.
- NOSAL,D.,STEINER,1987.Flüssigmistsysteme. Funktion und Schadgassewerte. FAT. Nr.29
- PÖLLİNGER, A., 2001. Bewertung von Entmistungsverfahren in Rindwerlaufstaellen. BundesanstaltfürGumpensteinerBautagung 2001, p.35-42,„Stallbau - Stallklima - Verfahrenstechnik“ alpenländischeLandwirtschaftGumpenstein, A-8952 Irdning
- Rüprich,W., 1980. GeruchsfreieGülle. Umweltfreundlich. DLG Verlag, Frankfurt.
- Wiesmann. http://www.viessmann.de/de/Nahwaermenetze/Produkte/Biogasanlagen.html (14.02.2011, 14.46)
- YALDIZ, O. 1995. Hayvancılıkta mekanizasyon. Akdeniz Üniversitesi Yayınları. Yayın No. 55.ISBN:975-7666-42-4
- YALDIZ,O. Biyogaz Teknolojisi. Akdeniz Üniversitesi Yayınları. Yayın No. 78.ISBN: 975-7666-64-5

11. CHAPTER

Herd Health

Assoc. Prof. Mehmet Çağrı KARAKURUM

11.1 Introduction

The size of stockbreeding businesses have started to grow in Turkey in recent years. A profitable production in stockbreeding businesses can only be achieved through healthy herds. Having a healthy herd and a sustainable prevention of herd illnesses are key to the success and efficiency of production.

Herd health means taking regular preventive measures in order to create sustainable good health of animals in the herd. The objective of a herd health program is, above all, to ensure the most efficient production under the best health conditions and to bring maximum economic return to the producer. Another objective should be inter alia to ensure animal welfare as well as to minimize environmental wastes and zoonosis.

Herd health programs are animal health-oriented practices and should contain preventive medicine practices, which are less expensive rather than curative measures for the overall productivity of the herd. What is fundamental to herd health programs is timely implementation of proper anti-disease programs in order to bring diseases under control or to prevent them all together. Additionally, one of the most common mistakes in herd health practices is to ground the program solely on a vaccination/immunization basis. For an efficient and effective use of time, labor, money and other resources, cattle breeding businesses should have a comprehensive herd health program and effective coordination between and among the owner of the business, zookeepers and veterinarians. Within this context, the establishment of proper barn systems, herd immunization (region-specific vaccination), biological risk management (bio-security), nourishment, reproduction management and udder health control programs should be the fundamental elements for a herd health program. Each element mentioned above are complementary to one another and should be implemented in this order.

A successful herd health program is designed on three pillars:

1. An eager breeder
2. An eager veterinarian with herd health management capability
3. A regular registration system and animal ID.

Business managers should seek ways to prevent diseases rather than to cure them. The veterinarian should undertake the role of consultant rather than the healer.

Another success factor for herd health programs is that business owners should have the minimum information and know-how required to run these programs and should be able to get in touch with other experts and specialists (e.g. nutritionists, genetic scientists, gynecologists and obstetricians) to acquire any information that they might need to develop an effective herd health management system corresponding to the special needs of the business.

The basic objective in health management is to form a healthy herd. This program aims at carrying out the health checks of the animals, starting with the selection of the breeding animals, controlling the diseases in the herd and forming a herd which is resistant to and immune from diseases, registering the diseases and productivity on a regular basis, restricting the economic losses caused by diseases, maintaining the performance of the herd at the highest level and maximizing the profitability of the business.

A health management program starts with health checks and observation of the herd. Observation of the herd is a problem-solving practice, which explains the interaction among factors creating problems on the farm.

11.2 Herd Observation

It is the most important part of all herd health control systems. Once a problem occurs, it is possible to make an immediate intervention and solve the problem properly owing to herd observation.

Information should be collected, evaluated and registered regularly for herd observation practices. Registration is essential for evaluation of the performance of a herd. Evaluations for the targets set forth in the herd health control program are conducted by taking into account the herd observation, disease prevalence and productivity records. Performance of the herd is evaluated by comparing the targets with the obtained results.

To this end, regular information flow should be ensured, and an observation plan for daily health checks of all animals in the business should be formed for evaluation.

The observation plan is made within the framework of the health management program. Under this observation plan, which starts with herd observation, overall situation, feed and water consumption, monitoring and observation of defecation and rutting symptoms checks for reproduction and udder health during and after the dry period, pregnancy and calving, and finally observations and evaluations are carried out concerning reproduction records and animal welfare.

Targets, which are set forth in herd health control programs, should be achievable within a given period of time and should also be reasonable and practicable.

Observations under the herd health, which is the topic of this section, should be carried out by the keeper in charge of the relevant unit.

Any change in feed-eating behaviors (lack of appetite or a complete interruption of feed-intake) can be the initial symptoms. Disease symptoms may also include an overall disorder,

malaise, and pelage disorder, lack of appetite, high fever, optical and nasal discharge and coughing. Animals showing any of these symptoms should immediately be taken under observation in a quarantine area and the veterinarian of enterprise should be informed of the situation.

- The excrement composition (diarrhea or constipation) of animals should be checked for its color (e.g. blood) or content (mucous elements or too many grains). The veterinarian should be consulted when one finds excrement to be abnormal.
- Newly-calved cows should be followed up for 24 to 72 hours to check the placenta, post-natal discharges, defects in milk or swollen udders.
- New-born calves should be followed up to see whether their mothers pay due care for them, whether they take in a sufficient amount of colostrums, whether they can stand up, whether they have a sucking reflex or whether they have respiration difficulty.
- In order to prevent and control mastitis in the herd, dry period treatment should be given and a mastitis control program, including vaccinations designed in accordance with the mastitis cases seen in the farm should be implemented.
- To follow up rutting cases in the herd, daily observations should be made and caws should be monitored at regular intervals every day.
- Adjustments should be made for regular foot examination, foot care and nail cutting.
- Lame animals should be treated, and foot care and nail cutting should be performed every six months. It was found out that foot and nail diseases ranked 3rd in causing economic losses in dairy businesses, the first being mastitis and the second being fertility problems. The most frequently seen reasons for lameness in animals include improper nail-cutting, unsanitary bard and paddock conditions, unsanitary barn floors and malnourishment for higher productivity (nourishment with feed rich in carbohydrates but poor in fiber, sudden changes in diet during the calving period, and nourishment with high-concentration feed, which causes subclinical laminitis in animals). If lameness is widely seen in the farm, those in charge of the business should then implement nail care, improve nourishment and hygiene conditions in the barn and paddock, follow up the lameness cases with herd observation cards and periodical nail care cards or computer programs, and administer the relevant treatment procedures to lame animals. Footbath should be used to prevent foot diseases.

11.3 Immunization Guideline for Caws

In any type of herd health management program, vaccination/immunization is the key to sufficient performance and disease prevention. Treatment options for diseases are not economically as efficient as prevention. A sound herd health program includes prevention and control of various communicable diseases. However, it is a challenging job to select the appropriate vaccines for your herd given the very high number of vaccines available.

The importance of vaccination/immunization programs in animals, especially the ones with nutritional value, is obvious because many communicable diseases are yet to be eradicated in Turkey. Epidemics can sometimes take place due to the animal movements and particularly the failure to control the illegal trans boundary animal movements on the eastern part of the country. Because of insufficient – or lack of – implementation of vaccination programs, both the economy of our country and our cattle breeders suffer from serious economic losses, which makes it indispensible for cattle breeders to implement the vaccinations. Every breeder should visit a veterinarian and learn about the communicable diseases, which are very common in his/her, region, and ask for a vaccination program. Regular and proper vaccination will facilitate control and eradication of many communicable diseases seen today in our country.

The following guideline for vaccination of cows may not be appropriate for every case. The starting point for the best use of this guideline is to develop an effective vaccination protocol, which you will design with your herd health veterinarian or consultant.

Table 11.1 Viral vaccinations for cattle

Vaccine Type	Age of Vaccination	Vaccination Dose	Immunization Period	Notes
Food and Mouth Disease	Vaccination can start when 2.5 months old.	2 ml SC 3 ml SC	5-6 months	- In epizootic regions, in the starting phase 2 doses, rappel dose in 4 months, and vaccination should carry on later at 4-month intervals
IBR	All caws at least 3 months old or older can be vaccinated	Main Vaccination: Two injections at 4 –week intervals	6 Months	- Ideally ten days before calves are moved anywhere – in 2-3 weeks before the transfer
BVD	It should be administered to cows older than 6-8 months (dead vaccine)	The first injection is made as single dose 2 ml IM approximately in two months before the first pregnancy of animals.	1 year	-MLV (live) BVD vaccine is recommended 3 weeks before insemination.
Rabies	For those older than 3 months	2 ml IM	1 year	- In quarantine regions, the rappel dose should be given before the end of quarantine.
BRD (Respiratory Track Diseases Complex)	Starting from 2 weeks old, vaccination should be made twice at approximately four-week intervals	In risky periods, injections should be given two weeks before	6 months - 1 year	- As the disease is a multifactor, the specific pathogens in the herd should be identified and vaccines should be selected accordingly.

Table 11.2 Bacterial vaccinations for cattle

Vaccine Type	Age of Vaccination	Vaccination Dose	Immunization Period	Notes
Brucellosis	Female calves 3-6 months old	1 ml SC	-	- The vaccine to be used should not develop coetaneous reactions against allergic skin tests like brucellin.
Pasteurellosis	Can be administered to those older than 15 days. Generally recommended to vaccine those older than 3 months	Two doses at 3-4 week intervals. If vaccinated before three 3 months old, injection to be repeated at 5-6 months of age.	6 months	- In 2 weeks before the period it will go under stress, - Not applicable to the ones with bronchopneumonia, those younger than 15 days, and not earlier than 15 days after Septi-serum intake
All Clostridial Infections	Between 3-6 months in calves, At any age in adults	Two injections at 2-6 week intervals, 5 ml SC	6 months- 1 year	- The first vaccination is made in the 3-6 months old period in calves.
Salmonellosis	First dose 21 days old, second dose 14-21 days later	Combined with Clostridial vaccines. 4 ml SC	6 months	- No inconveniency to vaccine pregnant animals. (warnings should be followed in commercial products)
Cl. Perfiringens type A,B,C, and D) and/or Cl. chauvoei or tetani	Calves can be vaccinated between 4-10 weeks. Cows are recommended to be vaccinated 6-8 weeks before calving.	2 ml SC at 4-6 week intervals	6 months- 1 year	-As maternal antibodies protect the calf at least for 3 months, the first vaccination is made from 3 to 6 months in calves.

Vaccine Type	Age of Vaccination	Vaccination Dose	Immunization Period	Notes
Cl. botulinum	2-3 injections recommended at 21-day intervals. Those with Botulismus symptoms and those 4 months left to calve cannot be vaccinated	2,5 ml SC / 2 ml SC at 14 day intervals	6 months-1 year	-vaccination is generally recommended in regions under risk.
Leptospirosis	Single dose injection is recommended after 5 months old if they have taken maternal antibodies.	2 ml IM	1 year	- two injections are recommended at 4-6 month intervals in adult cows
Anthrax	In spring where there is a risk for Anthrax Immediately where the disease breaks out.	At the neck – back of the shoulder SC-1 ml	1 year	-vaccination is recommended to be made in 4 weeks before the date when the outbreak is expected. -not applicable to animals with high fever and in late periods of pregnancy
Vaccine to prevent diarrhea in calves	Applicable to all pregnant animals at any age	2 doses at 2-3 week intervals, the 2nd dose to be in 2-3 weeks before calving	1 year	-applicability of Rotavirus and Coronavirus MLV oral vaccinations has not been proven yet.

Table 11.3 Vaccinations for fungus infections in cattle

Type of Vaccine	Age of Vaccination	Vaccination Dose	Notes
Trichophytosis	In vaccinated herds, any new member of the herd should be vaccinated.	In two doses at 10-14 day intervals, 4 ml as prophylactic, 8 ml IM as therapeutic	- No prophylactic dose for infected animals.

a. Bio-safety (Biological Risk Management)

The bio-safety plan is an innovative approach in risk management of contagion and transmission of a disease into a stockbreeding business. The bio-safety plan should be designed to help stockbreeders define disease risks and prevent not only new or unexpected diseases but also common and frequently encountered infectious diseases on a practical scale. An effective bio-safety plan identifies the main routes of the contagion of the disease.

Here are some examples of the bio-safety practices, which significantly alleviate the contagion risk:

Utilization, being easy-to-clean and similar issues of the buildings/facilities should be taken into consideration in selection of the model, plan and construction materials. Materials should be easy-to-clean. Roads around the buildings, surfaces, floor, ceiling and walls of the building should be cleanable. Entries and exits of the farm should be containable. No vehicle should be allowed to go inside the farm. Even the veterinarian of the enterprise should not be able to drive inside the enterprise, should park outside the farm and put on his/her special garments and boots at the entrance of the farm. All visitors should be informed of the current bio-safety plan. It should be ensured that all visitors put on the garments and boots belonging to the enterprise. Disposable shoe covers and scrubs are recommended when possible.

- If there is any neighboring stockbreeding enterprise, a physical barrier should be established to prevent any physical contact between two herds.
- As flies, insects, birds and rodents are likely to transmit and communicate diseases, an effective protection should be provided.
- A quarantine area should be established within the enterprise. Cows newly-joining the herd should be kept under quarantine for at least 21 days during which cows should be tested for some diseases including Tuberculosis, Para-tuberculosis, Brucellosis, BVD, IBR and Leukosis.
- Cleaning should always be conducted first, after which disinfection should follow. Cleaning is conducted as both dry and wet. Dry cleaning is conducted by first physically sweeping off, collecting and removing the items such as fertilizers, feed, dust, soil and sludge. A wet cleaning should follow by using water. It is useful to make a pre-disinfection by using detergent cleaners. Washing water should be sprayed by a compressor to remove sticky dusts. You should wait for cleaned places dry after the cleaning.

- Once the cleaned surfaces dry, disinfection is conducted. Disinfection is a process used to eradicate pathogenic agents or to minimize diseases caused by them. Substances with different features used for this purpose are called disinfectants.

b. Nourishment in Herd Health

Metabolic diseases caused by malnourishment have a very high prevalence in dairy cows. These diseases have an adverse impact on milk production and reproductive efficiency. These diseases include ketosis, fatty liver syndrome, hypocalcaemia, abomasum displacement, ruminal acidosis, laminitis, and placenta retention. Treatment of these diseases is sometimes difficult and expensive, and also the occurrence of one disease increases risk of other diseases. Expert assistance should be sought in preparation for the ration if needed. The ration should be balanced in energy, protein, cellulose, vitamins and minerals. Cows should be grouped according to their milk productivity when they are nourished, and "proper nourishment based on the needs" should be a principle. Cows in dry period should have a body-score of 3.5, which should be the value kept during calving. Cows in dry period should not be given too much corn silage and should do exercise. After calving, the ratio between rough feed and concentrated feed should be well adjusted to avoid diseases, such as ketosis, rumen acidosis and displacement of abomasum. A limited amount of calcium should be added into the ration of the cows in dry period to prevent hypocalcaemia (milk fever). Malnourishment during the transition period (last three weeks before calving and first three weeks after calving) may result in serious health problems (infectious and metabolic diseases), which adversely impact the milk productivity throughout the entire lactation period and result in serious problems in reproduction. Nourishment of cows in the transition period should therefore be paid due diligence and maximum care. Cows should not take in too many more calories more than they need during the mid and late lactation periods, and they should not get too fatty. We should bear in mind that nourishment is instrumental in making animals resistant to diseases and the immunization system can react strongly against diseases only in well-nourished animals.

Feed hygiene is also critical for maintenance of herd health. Feed should be regularly monitored and decayed or moldy feed should not be used in nourishment of animals. Use of such feed adversely affects the immune system and results in reproduction problems, reduced milk productivity and many diseases including mastitis.

Please find further information in the section on Nourishment of Dairy Cattles in this book.

c. Udder Health Control Program

It is obvious that mastitis (Udder inflammation) causes serious economic losses as we consider the decrease in potential milk productivity, treatment costs, impossibility to market the milk of an ill cow, and cows expelled from the herd due to a failed treatment. All dairy cattle breeding businesses aim at high quality dairy production at the highest quantity

possible. The way to this target is to implement an effective mastitis control program. An effective udder health program should include the followings:

1) Sub-clinic and clinic mastitis cases in the herd within a given period of time should be evaluated realistically and targets should be set accordingly. A comparison should be made between the targeted number of cases and the cases seen in a given period of time, and additional measures should be taken if necessary.

In an enterprise which is well-managed in general;

- The number of dairy cattle staying out of milking in any working day due to mastitis should not be more than 0,5% of the herd.
- It should be considered normal if clinical mastitis cases decreases the dairy productivity of the herd by 1%.
- At spot checks, the proportion of infections due to the main mastitis agents should not be more than 12% in cows and 5% in udder quarters in general.
- The proportion of cows, which have to leave the herd due to mastitis cases, which are not treated, should not be more than 3% for each year, and the proportion of the dead ones or those sent to compulsory slaughter should not be more than 1% for each year.

2) Animal welfare should be kept at the highest level by providing them with a clean, dry and comfortable environment. The measures to be taken to this end can be listed as the proper size of compartments, clean and dry conditions of the place where cows lie and wander around, favorable air-conditioning, isolation from adverse environmental factors *(e.g. heat stress and non-controlled airflow)* and ensuring animals continue to stand after milking.

3) Favorable milking conditions should be established within the enterprise. At the beginning of milking, the milk accumulated in the udder cistern (pre-milk) should be physically checked for mastitis. Appropriate udder disinfectants should be used before and after milking, and the milking personnel should wear disposable gloves. The tip of the udder should be disinfected with the immersion-type disinfectants rather than the spray ones. Training of the milking personnel should be given importance, and milking procedures and practices should be audited at regular intervals internally within the enterprise and by external experts at least twice a year.

4) Maintenance and cleaning of the milking equipment should be carried out regularly. Depreciation, wear, pollution and missing or wrong hardware may impair the technical specification of the machinery. Any malfunction in technical specifications of the milking machine, first causes a reduction in lactation milk productivity and increases the risk of developing udder inflammation. Furthermore, milking at insufficient vacuum and pulsation rates delays the main and final milking times and

reduces the labor efficiency thereby. Therefore, control, maintenance and cleaning should be carried out at regular intervals to ensure that the milking machine always retains the proper technical specifications for milking. Regular and continuous maintenance and cleaning of a milking facility, which is utilized regularly every day of the year, is of utmost importance. Table 11.4 shows the maintenance works of a milking facility by timeframes.

Table 11.4 Maintenance Works in a Milking Facility

Time	Checks and Maintenance
Daily	Check the vacuum-meter (zero and operation vacuum). Check and calibrate the pulse frequency. Clean the air-flow hole in the milking claw Check short milk and vacuum pipes.
Weekly	Clean the vacuum valve. Check the oil level of the vacuum pump. Check the internal wall at the milking cap (stiffening, break-through and etc.).
Monthly	Clean the pulsator. Check the impermeability of milk taps (valves).
Semiannually	Check the belt tension transmitting motion from the engine to the vacuum pump. Clean the vacuum pump. Clean the vacuum pipes and vacuum tank. Renew the internal walls of the rubbers in milking caps. Check the impermeability of milk pipes and fasteners.

Due diligence should be exerted to clean and disinfect the milking facility after each milking activity every day. Additionally, an overall cleaning should be conducted every 15 days to sweep off any residue or debris.

5) An effective udder health registry should be kept for each enterprise and every individual dairy cattle.

These registries should be kept effectively, practically and systematically, and also easy to analyze when needed.

Milking data specific to dairy cattle and heifers *(the amount of milk productivity, temperature of milk, electrical conductivity of milk, the milking flow rate and pre-milk examination results),* clinic and sub-clinic mastitis cases, examination and test results

per patient *(such as CMT)*, data obtained through microbiological and other laboratory examinations when needed *(bacteriological culture, isolation and identification, total number of bacteria colonies, total number of microorganisms, number of somatic cells, linear score, biochemical analysis of milk, antibiogramme and antibiotic residue tests, PCR and other genetic analyses),* therapeutic practices and results, herd tank milk controls *(e.g. amount and biochemical, microbiologic and cellular quality values)*, overall parameters specific to the enterprise and herd *(administrative, overall health profile, vaccinations, nourishment of animals and regional conditions)* and finally the results of the comparison with other neighboring enterprises *(league score)* should definitely be included in the registration system.

6) Clinical mastitis cases should be treated by developing an effective treatment protocol when the cow is in lactation. In light of the data and registries mentioned above under the previous item, herd and individual-specific treatment options should be formulated, and attention should be paid to the use of antibiotics as less as possible. Laboratory results should be definitely taken into account, and the therapeutic process should be sustained with patience and accuracy. Supportive treatment should be administered when needed.

7) An effective dry period program should be formulated within the enterprise. Such a program is supposed to include activities such as taking the milking cows to dry period, nourishment and accommodation during the dry period, treatment of mastitis cases, which cannot be treated during chronic, and lactation periods, prophylactic dry period treatments, vaccinations and cleaning of the cow. In animals with decreased milk productivity in the lactation period, it should be preferred to take them immediately to dry period. Cost calculations should be made, and if possible, non-specific dry period therapy practices should be planned for all udder quarters of individual animals taken into dry period.

8) An effective bio-safety program should be followed for contagious germs. In a breeding dairy cattle herd, with a sufficient herd size and average age of lactation, regeneration and rejuvenation programs are implemented at 20% annually. Animals with mastitis which do not positively respond to the treatment should be shelled out of the herd – constituting part of the 20% – and be substituted by healthy young animals either internally from within the herd or by means of purchasing. Animals to be purchased should be checked for mastitis in advance. Persistent infected cases or cases resistant to treatment should be sorted out.

9) Udder health of the heard should be followed up regularly. Laboratory or physical diagnosis methods should be regularly used for each cow in the herd to identify sub-clinical mastitis cases. Table 11.5 shows the leading examination and laboratory diagnosis methods.

Table 11.5 Leading examination and laboratory diagnosis methods

Time	Examination, control and laboratory analyses
At every milking	Check the pre-milk Availability for milking Reactive behaviors of animal to milking Amount, electrical conductivity and temperature (within the capabilities of the milking system)
Daily	Amount of tank milk Alcohol test, Antibiotic residue test Value of tank milk somatic cell number
Weekly	CMT examination and mammary check in milkers
Monthly	Individual (at udder quarters level if possible) somatic cell count and linear score Review of the registries and check of the milking routine
Semiannually	Except for spontaneous cases, microbiological tests, PCR and genetic-based laboratory examinations and antibiogramme tests and biochemical analysis of milk in a sample group
Annually	A comprehensive review of the herd udder health registries including all data and findings Analysis and evaluation of these data in cooperation with independent expert people or organizations An elaborated check of the milking system and milking practices and maintenance services Defining the success level according to the targets and the league score

10) An udder health control team should be established to evaluate the udder health of the heard in their regular meetings and to re-arrange the udder health control program in accordance with the actual needs of the enterprise.

d. General Prevention Methods in Calf Diseases,

Calves are critical for the future of a herd and an enterprise.

- If possible, cows should be synchronized to calve in seasons in which calf diseases (especially calf diarrhea) are rarely seen, in order to minimize the prevalence of neonatal diseases.
- It is extremely important that new animals should not be added into the herd from outside during the calving season, as addition of new animals into the herd from outside would bring pathogenic microorganisms into the calving environment. This may result in insufficient colostral immunity (immunity that comes from colostrums) which is vital for calves. If a new animal is brought into the herd despite all this risk, a quarantine area should be established at the entrance of the enterprise where the new-coming animal should be retained for disease controls and required vaccination procedure should be completed, and the new animal should be allowed into the herd only thereafter.

- Calves younger than three months and cows in the final stage of pregnancy should not be purchased. Because immune systems of calves younger than three months are not yet fully shaped and the passive immunity they have is in line with only the enterprise where they came from, there is a very high risk to catch infective diseases. In cows that are purchased in the final stage of pregnancy, production of maternal antibodies in accordance with the conditions of the new barn will not be sufficient.
- Preparation of the ration properly in terms of minerals, vitamins, energy and proteins within the last three months of pregnancy will help preparation of high quality colostrum.
- Taking the cow into the dry period box within the last two months of pregnancy and nourishing her in accordance with the requirements of this period, keeping the pregnant animal untied and providing her with mobility will reduce not only the stress in the pregnancy period but also the incidence of many metabolic diseases, including liver-fattening, and help the cow calve more comfortably and have higher antibody titers in colostrum. In the 7th and 8th months of pregnancy, combined vaccinations should be administered against E. coli, rotavirus and coronavirus.
- The cow should be taken into a separate calving box ten days before calving.
- Temperature and humidity ambient where animals accommodate should be closely observed. Insufficient accommodation conditions significantly increases the incidence of diseases including particularly respiratory and digestive system diseases in calves. Ambient temperature is an important factor on calves' health. Too hot or cold weather conditions adversely impact the health of calves that have not developed their heat isolation skills yet. High humidity and ambient temperatures in the barn will result in the loss of too much liquid and dehydration due to perspiration. The humidity rate is an important factor restricting the survival period of the pathogen organisms in the barn and should be between 55% and 75%. The humidity rate will go down and hazardous gases and pathogen organisms will be reduced if fresh air is sufficiently ensured in the barn through ventilation.
- Once a calf is born, its umbilical cord is cleaned with an antiseptic. The umbilical cord should not be tied. It is critical to give the calf colostrum at amount of 5% of its body weight with a feeding bottle and to administer the Septi-serum in the first two hours just after the mother cow cleans the calf. The calf is then taken to another box, which is clean and covered with a lot of underlay. In order to ensure an effective passive immunity transfer, high quality colostrum at the amount of 10% of the body weight of the calf should be given within the first 24 hours. Once the calf sufficiently takes the colostrum, the remaining colostrum should be milked into a clean vessel and filled into 0.5 liter bottles by adding 0.1% propionic acid and stored in a refrigerator or deep freezer. Conversely colostrum can be brewed with cheese yeast and then its serum is taken. It is stored in the same way. The colostrum itself or its serum is given to the calf once or twice a week.

- The teat of the feeding bottle should be frequently checked. The teats with a very loose mouth or worn-out teats should not be used because they might cause aspiration pneumonia. Feeding bottles should be washed and disinfected after each feeding.
- Calves should not be kept in the same place with adult cows, which are the porter of many infection agents. The most effective accommodation method is to use individual calf boxes. Individual calf boxes are advantageous because they protect calves from hazardous gases and provide them with fresh air. This practice may help prevent the problems that are likely to occur in calves if they are retained indoors. After staying in individual calf boxes for about 4-6 weeks, they have to be taken in according to their age groups.
- Calf boxes should be disinfected with a strong virucide and bactericidal disinfectant after each calf exit.
- Some certain personnel should take care of the calves and proper antiseptic pools should be established at the entrance of calf units.
- If neonatal calf diarrhea is common in the herd, 1-2 gram ascorbic acid can be administered per os per day to new-born calves until they reach one-month old.
- Ill calves should be immediately isolated.

References

- Afşin KÖKER. Sütçü İneklerde Subklinik Mastitislerin Şekillenmesinde Sağım Makinesine İlişkin Sorunların İncelenmesi. Ankara Üniversitesi, Sağlık Bilimleri Enstitüsü, Veteriner Doğum ve Jinekoloji Anabilim Dalı, Doktora Tezi (Tez No: 91099), 2000-Ankara.
- Çeçen G, Görgül OS. Bursa Yöresindeki Bir İşletmede, Sağmal Süt Sığırı Sürüsünde Karşılaşılan Topallıkların Değerlendirilmesi. Veteriner Cerrahi Dergisi, 13, 5-10, 2007.
- Herd Health. http://www.aces.edu/pubs/docs/A/ANR-1323/ANR-1323_3.pdf Erişim tarihi: 29.12.2011.
- Karakurum MÇ, Kaya ÇY. Aşılama Programı. Damızlık Sığır Yetiştiricileri Dergisi, 19, 3-7. 2000.
- Maden M. Sağlıklı Bir Sürü Nasıl Oluşturulur. SİYEP.2009. Antalya.
- Philpot, WN, Nickerson, SC. Mastitis Counter Attack, Babson Bros. Co.,Illinois, U.S.A. (1991).
- Radostits OM. Control of Infectious Diseases of Food-Producing Animals In: ed. Radostits OM. Herd Health – Food Animal Production Medicine. 3rd ed. W. B. Saunders, Philadelphia. 2001.
- Review your mastitis control Program. http://www.cals.ncsu.edu/an_sci/extension/dairy/newsletter/0107nlet.pdf Erişim tarihi: 03.01.2012.

- Sürü Sağlığı ve biyogüvenlik. http://www.ciftlikdergisi.com.tr/suru-sagligi-ve-biyoguvenlik.html. Erişim Tarihi: 29.12.2011.
- Temel sürü sağlığı yönetimi. Ed. Oğan M. T.C Anadolu Üniversitesi Yayını no: 2333. Eskişehir, 2011.
- Şentürk S. Buzağıların İç Hastalıkları. Bursa, 2006.
- Ulusal Hayvancılığın gelişimi için sürü sağlığı. http://www.infovetdergi.com/pdf/2008martsurusagligisempozyumbursa.pdf Erişim tarihi: 29.12.2011
- Yıldız R. Sürü sağlığında bulaşıcı hastalıklarla mücadelede aşılamanın önemi. Selçuk Üniversitesi Sağlık Bilimleri Enstitüsü, 2011

12. CHAPTER Animal Recording for Genetic Evaluation and Management Purposes

Dr. Milan ZJALIC

12.1 Introduction

Animal identification is strongly associated to the domestication of animals (Landais, 2001 quot. by Caja et al.). Early pastoralists and herders used to identify and recognize their animals by their natural characteristics such as coat color, horns, hair curls etc. The next step in identification was the use of animals' marks by herders since the Neolithic period. Different methods of marking animals were used by Egyptians, Greeks, Romans, nomadic people of Scandinavia, Asia and Africa, and pre-Hispanic Americans for different purposes. Animal identification methods could be classified according to the nature of the characters used (natural or artificial), and to the permanence of the character on the animal (permanent or temporary). Natural characters are generally used for animal recognition, while artificial characters (marks) are made by humans for different purposes. Permanent marks (indelible, such as notching, branding, tagging), are applied as signs of individual identification, ownership or protection (e.g. animals in quarantine); and, temporary marks (e.g. erasable or removable) are useful for animal management.

Collection of data on milk production with a view to selecting best cows for reproduction started at the end of 19th century in USA (1893), Denmark (1895), Germany (1897), (Hungary (1897), Finland, Norway and Sweden (1898) and Netherlands (1899). Between 1910 and 1925, Milk Recording spread to many countries. Data recorded included quantity and fat content of milk. Each country and region used to apply its own methods and systems. In this situation, data recorded were hardly comparable. The growing international trade in breeding material, and later in bull semen, created the need for the standardization of recording. The first steps towards standardization were undertaken as early as in 1923. However, the systematic international work on standardization started only in the period after the World War II, precisely in 1951 when the European Milk Butter Recording Committee a predecessor of the present day ICAR, was established upon the initiative by FAO and EAAP by ministries of agriculture and breeders organizations from Austria, Denmark, France, Germany, Italy, Luxembourg, Norway, Scotland, and Spain. Over 80 breeders and producers associations and governmental bodies that constitute ICAR monitor developments in the social and economic environment, market, science and technology and develop standards and guidelines for animal identification and recording of traits of economic importance. The principal goal of ICAR and its Member

Organization is to provide technically sound, science based and efficient services to livestock producers in support of viability of both traditional and high-tech production systems.

The present review paper contains information on the use of animal identification and recording data in farm management in the European Union and in other countries, such as Canada, USA, Argentina, Chile, Australia, New Zealand and India where producers and breeders apply ICAR principles and methods.

12.2 Animal identification and registration as a pre-requisite for management and genetic evaluation

The modern system of animal identification introduced by the European Union after the BSE crisis and applied also in Turkey, stems from methods used in herdbook keeping that started in England in 18th century.

Animal identification is the basic pre-requisite for

- herd and farm management,
- animal recording,
- animal breeding,
- animal health management,
- trade in animals,
- labeling and traceability of animal products,
- control of subsidies.

ICAR developed rules and standards for animal identification, which in general comply with EU regulations but also contain provisions of importance for low to medium input production systems in developing countries.

ICAR rules include the following provisions:

- The recorded animal identity must be the animal's official identity in the related country and must be unique to that animal.
- The animal s identity must be visible.
- The animal s identity should be unique and never be re-used.
- The animal s identification device/method, must comply with legislative requirements.
- Animals, which lose their identity device must be re-identified and, wherever possible, with their original number, provided that there is evidence that the animal is being correctly identified (where this is not possible, a cross reference to the original number must be maintained).
- Animals moving from one country to another should, wherever possible, continue to be identified using their original identity number and name.

- In the case of imported animals, where the number has to be changed, the official records should also show the original number and name. The original number and name must be reported in Export Certificates, AI Catalogues and in catalogues of important shows and sales.
- Where an animal is identified using an implanted electronic device, the animal must be marked in a way which indicates the presence of an "electronic identification" device.
- The animal identity number will be a maximum of 12 digits (including check digits where used) and the three digit numeric code representing the name of the country in accordance with ISO 3166 shall be added to identify the country of origin. Three digit numeric ISO codes must be used for data transfer and storage. In printed documents, the ISO alpha country code should be used.

ICAR Sub-Committee Animal Identification organizes testing procedures for ID devices and issues the approval to devices that passed tests. Specialized test centers carry out tests on the basis of protocols and procedures developed by ICAR and approved by ISO as ISO standards.

ICAR procedure for testing of the performance and reliability of identification devices cover both conventional plastic or metallic ear tags and electronic devices such as transponders and the corresponding receivers. Devices are tested with regard to;

- ease of application and use,
- efficiency of animal recognition,
- durability and tamper proof quality,
- animal welfare.

Tests of ear tags include;

- performance of locking mechanism,
- resistance of locking mechanism in heat and humidity,
- visual readability – untreated and after the abrasive treatment,
- machine readability – untreated and in heat and humidity, acid bath, alkaline bath and abrasive treatment

As the ISO Registration Authority for ISO 11784 1 and ISO 11785, ICAR has developed procedure for testing of electronic devices for animal identification.

Tests of EID include:

- Conformity testing to demonstrate that electronic transponders and readers meet the specifications and standards of ISO standards. Submission to conformity testing is obligatory before they can be used in the official identification of animals. Testing is coordinated by ICAR as the ISO Registration Authority for RFID devices.
- Performance testing is an option for determining the operation of identification devices in practical applications. The objective of this type of testing is to provide widespread information concerning the special characteristics of identification

devices to end-user, e.g. farmer/owner. While conformance testing is mainly carried out in laboratories, the most important part of performance testing is often done in field conditions.

ICAR has approved over 200 tested ID devices from some 80 manufacturers. Manufacturers are granted an ICAR certificate together with an approval reference number.

All EU Member States and the great number of other countries throughout the world use ICAR approved identification devices – conventional ear tags, EID ear tags, boluses and inplants and EID readers and tranceivers.

The current EU rules for bovine identification contain basically the same provisions as mentioned in ICAR rules and standards. When these were adopted in 1997, Electronic Identification (EID) was not sufficiently developed from the technical point of view as to be applied at that moment for cattle. EID based on radio frequency identification (RFID) has considerably developed during the last 10 years and provides for a faster and more accurate reading of individual animal codes directly into data processing systems, saving labour costs for manual reading but at the same time, increasing equipment costs. Thus, the existing legislation on bovine identification does not reflect these latest technological developments. The use of electronic identifiers could help to reduce the administrative burden and paperwork, for instances when the holding register is kept on a computerised form (which is the case for a growing percentage of farms), by using automatic reading and by using automatic entry into the register. In addition, a faster and more reliable system will allow, among others, a faster and higher reading accuracy than classical ear-tags, easing the procedure to report animal movements to the central data base and therefore provides for better and faster traceability of infected animals and/or infected food.

Based on the EID current technological advances, several EU Member States have decided on a voluntary basis, to start implementing bovine EID. Experience outside the EU shows also an increasing use of bovine EID. In addition, EID has been already introduced in the EU for several animal species (most of them as mandatory).

The current legal framework does not prohibit Member States from using electronic identifiers on a voluntary basis, but this must be done in addition to the official conventional visible ear tags.

12.3 Animal Registration

Central register

EU Member States as well as a number of countries with systems of obligatory identification of bovines have national and regional – provincial registers of

- farms with bovines,
- all bovines in the country.

Farm register

In addition to their unique identification number, register of bovine animals on the farm must contains

- date of birth,
- sex,
- breed,
- ID of mother (in case of embryo transfer both ID of the donor and ID of the recipient)
- Origin – ID number of farm or country of origin,
- Movements (culling, death, sale).

Use of ID and register data for farm management and breeding

Many farms with advanced technologies collect and keep animal data as the base for management decisions. The on-farm data management system is composed of individual files for each animal and the central file with data for all animals on the farm. Data may be collected by recording organization and delivered to farmer for use in the herd management. In addition to data from the farm register, the individual animal files contain also

- Name and ID
- EBVs of mother and sire,
- milk production in previous lactations recorded (quantity, fat, protein, somatic cells, other components, such as lactose, urea)
- dates of previous calvings,
- date of last insemination (for pregnant cows and heifers)
- name and ID of sire,
- names and IDs of calves,
- dates of milk recording with production on days of recording, method of recording,
- health records (mastitis, ketosis, lameness, etc.)

Recording organization issues the final report for each milking cow on the results of milk control and analysis in each lactation.

ICAR recommends keeping of essential data for the individual animal certificates used for selection, trade, genetic evaluation and trade in animals.

Individual reports are combined in the herd report with data on estimated breeding values for each cow.

12.4 Milk Recording

Milk recording is an important management aid on any dairy farm. With the regular use of milk recording the farmer can select high producing cows for future breeding purposes or low producing cows for culling or that require attention. Also, by knowing a cow's milk production, the farmer is better equipped to judge supplementary feed requirements.

Measuring principles in general are based on weighing or direct or indirect measuring of volume by volumetric principles or others like infrared principles. In most cases, a milk-recording device consists of a milk meter and a more or less integrated sampler. In some cases, the sampler is a separate device more or less independent from the milk-recording device.

ICAR Standards, Rules and Guidelines for Milk Recording

Recording and breeding organizations in the EU Member States apply ICAR standards, rules and guidelines for cow milk recording.

ICAR standards define criteria to be applied consistently in the provision of recording and evaluation services, in the manufacture and supply of animal identification, performance recording and analytical devices and in testing of such and in analysis of animal products and performance for recording and evaluation purposes.

ICAR rules define basic principles of animal identification, registration of parentage, performance recording and genetic evaluation.

Based on sound scientific evidence, the **ICAR guidelines recommend procedures and methods** of animal identification, registration of parentage, performance recording and genetic evaluation.

ICAR methods of recording

a) Method A

All the recordings are undertaken by an official representative of the Recording Organization. This includes recordings undertaken by approved on farm systems that are supervised by an official representative of the recording organization and that cannot be manipulated by the farmer or his nominee.

b) Method B

All the recordings are undertaken by the farmer or his nominee.

c) Method C

The recordings are undertaken by the farmer or his nominee, and by an official representative of the Recording Organization.

In countries with ICAR members, milk yields are recorded and milk samples collected using equipment approved by ICAR.

The list of approved and provisionally approved equipment is included in the ICAR Rules, Standards and Guidelines for Approval and Checking of Devices and Equipment and is monitored and updated by the Secretariat and made available to members from time to time.

The accuracy of the equipment used for milk recording and analysis is checked by an agency approved by the member organizations, on a regular and systematic basis using methods approved by ICAR.

The analyses of the chemical composition of a milk sample are carried out on the same milk sample. These samples should represent the 24-hour milking period or should be corrected to a 24-hour period by a method approved by ICAR.

Only approved lactation periods can be used. The ICAR Guidelines on lactation period contains a list of approved lactation periods. Apart from the reference lactation period, performance records may also be presented for other recording periods e.g. annual yields or whole lactation yield.

Calculation methods

The quantities of milk and milk constituents are usually calculated according to one of the methods outlined in the ICAR Guidelines on Lactation Calculation.

ICAR standard methods of lactation calculation include:

- Method of Delorenzo and Wiggans (1986)
- Test Interval Method (TIM) (Sargent, 1968)
- Method of Liu et al. (2000)

Test Interval Method is recommended for management purposes in medium input production systems.

Member organizations inform the Board on the calculation methods being used by the records processing operations in their country. They are responsible for ensuring that the records are corrected and calculated as specified in the ICAR Guidelines for Lactation Calculation.

ICAR Standards for recording intervals

Table 12.1 ICAR Standards for recording intervals

Recording Interval (Weeks)	Minimum Number of Recordings	Interval between recordings per year (days) Minimum	Interval between recordings per year (days) Maximum
1	44	4	10
2	22	10	18
3			
Reference method 4	11	22	37
5	9	32	46
6	6	38	53
7	7	44	60
8	6	50	70
9	5	55	75
Daily	310	1	3

In recent years, in order to decrease costs of milk recording many organizations have applied variety of methods combining different intervals and methods. The development of milk calculation methods also contributed to the rationalization of procedures.

Milk recording devices

A milk-recording device has the function to:

- Measure the milk yield per individual milking of an animal (whole udder or per quarter).
- Provide a representative sample of this milk or perform an on-farm analysis of the milk on relevant parameters (at least fat and protein content) without significantly affecting the normal milking procedure and the quality of the harvested milk.

Milk weighing devices

Measuring the weight of produced milk by scales is very efficient and the low cost way particularly in low to medium input production systems in which cows are milked individually. Scales should be checked and controlled from time to time by the official standardization institutions. As the measuring of weight in open containers increases the risk of the contamination with microorganisms from the environment, special precaution should be undertaken to limit the impact on quality of milk.

The weight of the test vessel (tare weight) in measuring milk weight by **beam balance with two-scale beam** should be measured before the first milk of the recording session enters the bucket. The same test vessel must be used for weighing the milk from each animal over the whole recording session. The same person should read the weights during the whole recording session.

Like in beam balance with two-scale beam, in **spring balance** the weight of the test vessel (tare weight) is measured before the first milk of a recording session enters the bucket. The tare weight shall be applied for the whole recording session. The net weight of the pointing device (adjustable) should be set at zero and fixed in this position in an appropriate way. If no mechanical setting and/or fixing is possible, the amount of the tare weight should be written into the relevant list of milk recording data and shall be used for calculation of the real milk yield of each cow. The same test vessel must be used for weighing the milk from each animal over the whole recording session. The same person shall read the weights during the whole recording session. Final milk weight is read from the stable pointing device.

The accuracy resolution of beam and spring balances has to be no less than 0.1 kg.

The same principle should be applied in case of the use of modern **electronic scales.**

Jars

Materials, construction and installation of a milk-recording jar shall comply with the requirements of ISO 5707. The jars should be installed so that the yield can be easily read and

a sample can be taken without a risk for personal injury e.g. from animal kicks or trapping by moving parts of the installation. Recording jars shall be installed so that the distance between the operator's floor and the bottom of the graduated scale shall not exceed 1.60 m.

The milk release mechanism from the recording jar shall be milk tight and shall prevent milk from passing between the jar and the transfer pipe in either direction except when milk is deliberately released. The mechanism shall be as close to the jar as is practical. Where air admission is used as the means of mixing milk, then the air admission hole shall be adjacent to the milk release mechanism to eliminate the risk of some milk not being mixed with the bulk of the milk from the current animal.

ICAR has tested and approved several types of jars for milk recording.

Table 12.2 Approved jars

DeLaval Agri Inc	Model 8301064-03 65 lb
DeLaval Agri Inc	Model 8301064-04 85 lb
DeLaval Agri Inc	727909580 28 L
DeLavalAgriInc	96705580 32 L
Germania	Accu Weigh Computerized Milk Recording System
Milkrite	
Surge	Model 25177 Kimaxor Pyrex
Surge	Model 25799 Kimaxor Pyrex
Westfalia Systemat	Model 7009-2862-220

Milk meters

Milk meters are designed and produced either as a milk yield-proportioning device or as electronic milk meters.

Proportioning devices fit into the milk tube between each milking unit and the milk pipeline. They retain a known small proportion of the yield in a calibrated flask, from which the cows' total yield may be read, or the flask may be removed for weighing and the sampling ratio applied to obtain the milk yield.

A milk meter are designed to permit easy reading and handling by the operator while it is attached to the milking equipment. In addition, it shall be resistant to all conditions encountered in its normal working environment (i.e. during milk measuring and sampling, washing, disinfecting and, when applicable, transport). All parts subject to wear and tear shall be easily replaceable. The conditions for assembling of electronic milk meters are given by the manufacturer of the meter. If a milk meter is fitted with a calibration device or calibration option, adequate precautions shall be taken to prevent unauthorized alteration of settings.

Automatic milk recording systems

Automatic milk recording systems record milk yield and a) take samples of milk or b) perform milk analysis without human supervision or interference. Automatic sampling systems are well known in automatic milking systems, but could also be used in milking parlors. Systems for automatic milk recording

- Deliver electronic data. The file must include cow ID, amount of milk, time of milking and the position where the cow was milked. The file must contain every milking during the recording period.
- Have no mismatches of animal identification with milking time, milk production and sample identification/results of the milk analyzer.
- Have a success rate in reading animal identification of at least 98 % (and must have the technical capability of 100% correct identification at recording).
- Indicate if a milking is a complete milking (at least 80 % of the expected milk yield is collected).
- Take samples each time an animal is milked and take care that samples are properly treated and/or stored to ensure the quality of the sample for analyses or perform milk analysis each time an animal is milked.
- Have a capacity to record and sample all the animal milkings within the intended sampling period;
- Have a rate of sampling / milk analyzing to ensure no or minimal delay of the milking of the next animal.
- In case of sampling: the sampling unit shall meet with ergonomic demands (weight, construction, connectivity, accessibility of critical places, portability).

Milk analysis

At the beginning of the milk recording era, the key factor was milk fat content or, more precisely, butter fat, and there was competition among different methods of analysis - the Gerber, Hoyberg, Rosegottlieb, Babcock and Lindstrom methods, some simple but not very precise, others combining greater complexity with greater precision. Discussion was also beginning over measurement of milk dry extract and casein. Few decades ago, the milk market and milk processing industry launched the request for milk with higher protein content – the trait of basic importance for processing industry and cheese making. Protein content was included in breeding objectives and measurement of protein content has become a routine operation, particularly with the introduction of new analytical techniques and the use of NIR analyzers.

For many decades, milk-recording analysis is performed in specialized milk testing laboratories equipped with automated instrumentation for rapid testing. Those laboratories implement quality control and quality assurance procedures according to international

standards as ISO/IEC 17025 and ISO 9001, proof of which can be given through accreditation and/or certification by competent bodies. They carry out ring tests and calibration procedures so as to ensure required accuracy and quality of results and services.

Milk testing laboratories are either independent companies or owned and managed by associations or cooperatives of breeders and milk producers.

Milk analysis starts with collection of milk samples at the time of milk production recording when samples of milk of recorded cows are taken by recording operator. Samples are marked and transported to laboratory for analysis. Results of analysis are communicated to recording the organization and to the farmer.

In addition to fat and protein content, laboratories, in many countries, also analyze somatic cell count, bacterial count, urea, lactose, hormones and other components as indicators of milk quality and the metabolic, reproductive and health status of the give animal.

In-line milk analyzer

Milk analyzers in combination with milk meters can measure milk flow and milk components (for instance fat, protein, lactose and somatic cells). Data generated by these devices can be used in daily management and in official milk recording. Other parameters, which can be measured by the same equipment, are for example measuring blood in milk, urea, hormones and so on. Such parameters are more related with farm management.

The milk analyzer

- Give a value for fat and protein, representative for all the milk collected during that milking.
- Does not affect the milk in any way.

A milk analyzer shall be designed to permit easy reading and handling by the operator while it is attached to the milking equipment. In addition, it shall be resistant to all conditions encountered in its normal working environment (i.e. during milking, washing, disinfecting and, when applicable, transport). All parts subject to wear and tear shall be easily replaceable.

The conditions for assembling of milk analyzers are given by the manufacturer of the device. If a milk analyzers is fitted with a calibration device or calibration option, adequate precautions shall be taken to prevent unauthorized alteration of settings.

A milk analyzer shall at least analyze fat and protein content, or as the total amount in that milking or as percentage of the milk. Other parameters as lactose, urea and somatic cells are not obliged, but could be a part of the approval test on request of the manufacturer. In that case, they have to meet the requirements also.

Next to the parameters mentioned above, also parameters as for instance conductivity, blood and progesterone can be measured in milk.

12.5 Conformation Recording of Dairy Cattle

The ICAR multi dairy breed conformation recording recommendation integrates with the World Holstein-Friesian Federation guidelines on the international harmonization of linear type assessment, trait definition, evaluation standards and publication of type proofs for bulls and cows.

Personnel charged with inspection must behave neutrally and must take their training and in-service training centrally. In order that the influence of the inspector may be corrected, the timing and regional use of them must be such that a number of inspectors participate in the assessment of the progeny of one bull. The number of inspectors working in a population must be such that at least 200 cows are being assessed per inspector per year.

Linear classification is based on measurements of individual type traits instead of opinions. It describes the degree of trait not the desirability.

Advantages of linear scoring are:

- Traits are scored individually.
- Scores cover a biological range.
- Variation within traits is identifiable.
- Degree rather than desirability is recorded.

The International standard traits satisfy the following definitions:

- Linear in a biological sense.
- Single trait.
- Heritable.
- Economic value; Direct or indirect with reference to the breeding goal.
- Possible to measure instead of score.
- Variation within the population.
- Each linear trait should describe a unique part of the cow, which is not covered by a combination of the other linear traits.

Approved standard traits

1. Stature
2. Chest width
3. Body depth
4. Angularity
5. Rump angle
6. Rump width
7. Rear legs set

8. Rear legs rear view
9. Foot angle
10. Fore udder attachment
11. Rear udder height
12. Central ligament
13. Udder depth
14. Front teat position
15. Teat length
16. Rear teat position
17. Locomotion
18. Body condition score

Common standard traits

19. Hock development
20. Bone structure
21. Rear udder width
22. Teat thickness
23. Muscularity

Each trait is well defined and it is essential that the full range of linear scores to identify the intermediate and extremes of each trait be used. The assessment parameters for the calculations should be based on the expected biological extremes of a cow in the first lactation. The scale 1 – 9 covers the biological extremes of the current population.

12.6 Breeding Values

Breeding values for bulls and cows are based on the classification of cows in the first lactation scored in a herd evaluation system. In a herd evaluation system all first lactating cows, which have not be previously evaluated, are scored during the visit of the classifier.

Additional classifications to obtain a bull proof may only be possible if completed by the same organization and daughters are sampled randomly with sufficient number of herd mates (contemporaries) scored during the same visit. A minimum of 5 first lactating cows, which qualify for genetic evaluation, are inspected at the same visit.

Evaluation model

ICAR recommends the use of the modern BLUP evaluation techniques so as to obtain accurate unbiased evaluations. Data should be corrected for influencing factors such as age, stage of lactation and season by the model. Classifiers should not make adjustments during scoring. Corrections for variation between classifiers are required to avoid heterogeneity of

variance. Herd mates are defined as the contemporaries of the evaluated heifers in the same lactation, scored during the same visit by the same classifier.

Composite traits

Composite traits are groups of linear traits relating to one specific area. The individual linear traits are weighted according to economic breeding objectives.

The main composite traits are

- Frame including rump,
- dairy strength,
- mammary,
- feet/legs.

General characteristics or breakdown for nonlinear traits

Type classification programs also include phenotype assessment. These are described as general characteristics or combined traits, which are not linear in a biological sense. A subjective score is given for the desirability of the cow according to the breeding goal. Female animals are inspected, classified and assigned grades/scores ranging from 50-97 points.

The most common scale for mature cows (second or more lactations) are:

- Excellent 90 - 97 points
- Very Good 85 - 89 points
- Good Plus 80 - 84 points
- Good 79 - 75 points
- Fair/Poor/Insufficient 50 - 74 points

The awarding of classification grades varies in each country depending upon the breeding goals, and therefore classification scores must be considered in the context of the country of inspection.

The final class and score are derived from a breakdown of the main functional areas of the female:

- Frame including rump
- Dairy strength.
- Mammary system.
- Legs/feet.

The weighting of the component breakdown scores should meet the breeding goals in the Country of inspection. It is recommended that for first lactating cows the range of scores used is 70 - 90 points. The average score is always in the middle of the maximum and minimum a first lactating cow can be awarded.

Current and potential uses of DNA Technologies

DNA technologies are used for parentage verification and parental assignment, molecular genetic information for marker-assisted selection schemes and diseases resistance and genetic defects.

Genetic markers commonly used are microsatellites and SNPs.

Microsatellites are segments of DNA containing tandem repeats of simple motifs usually dimers or trimers. These segments are located throughout the genome and normally in non-coding regions. These regions are subject to addition or subtraction of the number of tandem repeats which make them unique at each site of the genome.

SNPs - single nucleotide polymorphism – are located throughout the genome. The most informative SNPs are either located in coding regions, therefore different polymorphism imply a change in the structure or function of the encoded protein, or at non-coding regions that may be involved on regulatory function of the gene.

12.7 Recording and evaluation of udder health

Mastitis is generally considered as the most costly disease in dairy cattle because of its high

incidence and its physiological effects on e.g. milk production. A healthy udder is an udder free from inflammatory responses to microorganisms. Selection on udder health starts with recording. Only by recording, it is possible to differentiate in (predicted) breeding values for udder health between potential selection candidates.

Mastitis can be recorded directly and indirectly.

Directly recorded mastitis is for example the number of clinical mastitis incidents per cow per

lactation. The same can be done with sub-clinical mastitis, but this is mostly put on a par with

recording of somatic cell count. Somatic cell count can be obtained from milk analysis laboratories. California Mastitis Test can be applied in all situations as a cheap and efficient indicator of the somatic cell count and the state of health of each individual milk quarter. Other traits for indirectly recording mastitis are milkability and udder conformation traits (e.g. udder depth, fore udder attachment, teat length).

Recording udder health

Direct: Clinical mastitis incidents, sub-clinical mastitis incidents.

Indirect: somatic cell count, milkability, udder conformation traits.

Clinical mastitis is an outer visual or perceptible sign of an inflammatory response of the udder: painful, red, swollen udder. The inflammatory response can also be recognized by abnormal milk, or a general illness of the cow, with fever.

Sub-clinical mastitis is also an inflammatory response of the udder, but without outer visual or perceptible signs of the udder. An incident of sub-clinical mastitis is detectable with indicators like conductivity of the milk, NAG-ase, cytokines and somatic cell count

in the milk.

Recording and evaluation of udder health requires measuring direct and indirect traits, but also basic information is necessary. With an existing breeding program to be updated with udder health, this prerequisite information is generally available, which might not be the case when starting with a new breeding program.

Decreased somatic cell count (SCC) has been shown to improve dairy product quality, shelf life and cheese yield. Increased SCC decreases cheese yield in two ways: by decreasing the amount of casein as a percentage of total protein in milk and by decreasing the efficiency of conversion of casein into cheese. High SCC in milk affects the quantity of milk produced and the price of milk in many payment systems that are based on milk quality. High SCC milk has a reduced flavor score because of an increase in salts.

Advantages of lowering somatic cell count

- clinical mastitis: low incidence and few episodes,
- improved dairy product quality,
- higher milk prices.

Listed below are some of the areas that should be examined in herds with either increasing or high herd average SCC:

1. When was the milking system last serviced or checked? Is there a milking equipment problem, such as a loose belt on the vacuum pump, or a problem with a vacuum regulator or pulsator?
2. Has there been a change in milking, either technique or people? Are cows clean? Are teats dried thoroughly? Are individual towels used? Is teat dip used correctly?
3. Are free stalls clean and dry? Do cows use them? Has there been a sudden change in the weather to cause muddy lots or frozen teats?
4. Could there be a problem with dry cow management (environment or calving area, dry cow therapy)?

12.8 Genetic Evaluation Systems in Dairy Cattle

Increase in animal production and the attainment of economic objectives – higher profitability - could be obtained through the application of improved technologies and also through breeding and selection of best animals for parents of future generations. Parents of future generations are selected in accordance with their estimated breeding values (EBV) (Spehar et all, 2011). Genetic evaluation of dairy bulls is based on recorded data related to production and functional traits of their offsprings (progeny testing). Genetic evaluation is

carried out on local level by national and local evaluation organizations and by ICAR Sub-Committee INTERBULL at global – international level.

National genetic evaluation centers

National genetic evaluation centers could be one or more state or private - cooperative owned entities equipped with qualified staff. They provide services to breeders' associations, individual breeders, AI centers, traders in genetic material. The evaluation is preceded by a number of steps, such as

- of breed of evaluation (70% pure breed, crosses)
- ID of animal
- Pedigree with pedigree data
- Information on carriers of genetic defects
- Categorization of bulls - domestically proven bulls, imported bulls, young bulls with first batch of daughters, proven bulls with second batch of daughters, and NS bulls vs. AI bulls.
- Definition of traits including the range of acceptable genotypic values, age and parity.
- formation of contemporary groups, such as herd and geographical location of the herd (e.g. region).
- Information on internationally standardized methods of recording should be included. An example for the production traits is ICAR A4, A6, B4, etc.
- All other relevant information, depending on the trait of interest, should accompany the number of milkings per day, production system (e.g. Alpine pasture, total mixed ration (TMR) or grazing),
- methods for estimation of 24 hour and 305 day yields,
- extension methods,
- adjustment methods etc.
- Number of years of production data to be included in the evaluations should desirably be equal to at least 3 generation intervals (e.15 years) of consistently recorded data.

Statistical treatment

For the choice of evaluation model for milk production traits ICAR recommends the following set of priorities:

a) An animal model in contrast to a sire model;

b) A within lactation multiple trait model in contrast to a within lactation single trait model;

c) A multiple lactation model in contrast to a single lactation model;

d) A multiple trait multiple lactation model in contrast to a single trait repeatability model;

e) A test day model in contrast to a lactation model.

Expression of genetic evaluation

ICAR recommends the use of absolute EBVs, though the use of RBVs for domestic use and composite traits or indices may continue. However, in order to facilitate the international use of domestically published breeding values, in addition to the domestically used method of expression, all traits should be expressed as absolute Estimated Breeding Values (EBV), in the metric system (if applicable). Such values relate directly to the additive genetic value of the animal itself as well as to actual amounts of products.

Evaluation centers should provide detailed information on the definition and statistical properties (including descriptive statistics) of EBVs and RBVs on their web sites.

Genomic evaluation of breeding value

The rapid improvements in high-throughput SNP genotyping technologies, ever-denser SNP arrays accompanied by reduced costs for genotyping and for sequencing, opened the possibility of using genomic information in livestock selection. Genetic evaluation starts with the establishment of reference – training - population, which has been phenotyped and genotyped. The resulting data serve as a reference to develop a statistical model estimating the effect of each SNP with the trait or traits of interest. The result is a predictive equation to calculate a genomic estimated breeding value – GEBV. The accuracy of GEBV depends on the size of the population and the heritability of the trait to be considered.

Already some 30 000 bulls are evaluated by the use of genomic analysis. Genomic selection builds on existing breeding programs in which the collection of pedigree information together with phenotypic data is already a routine. It provides a new level of information that can be integrated into decision-making process to identify and select the most promising animals. (Schefers and Weigel 2012)

The genomic approach will improve the rate of genetic progress in comparison with traditional selection schemes. Many breeders are already applying genomic selection both when purchasing semen and when deciding the animals in the herd on which to use reproductive technologies. Genomic testing is used by AI companies to select young bulls and to decide which animals can make positive genetic contributions to the next generation. (Bagnato and Rosati, 2012)

International Genetic Evaluation Service

International Genetic Evaluations are across-country measures of genetic merit of dairy for individual traits. In 2011, the International Genetic Evaluation Service provided by Interbull evaluated a range of 34 traits of 6 breeds expressed in 30 national scales that are used extensively worldwide in semen marketing.

Interbull uses a scientifically advanced method known as Multiple Across Country Evaluation (MACE) to calculate International Genetic Evaluations. MACE has two major advantages over other methods:

1. **Use of all known relationships between animals**

   MACE combines information from each country using all known relationships between animals, both within and across populations.

2. **Genotype by environment interactions**

   MACE accounts for the possibility of animals re-ranking between certain countries. This occurs when animals perform better in certain environments than they do in others or when genetic evaluation methods differ between countries. For this reason, a separate set of results is calculated for every participating country. This process is demonstrated in the figure demonstrated in the figure below:

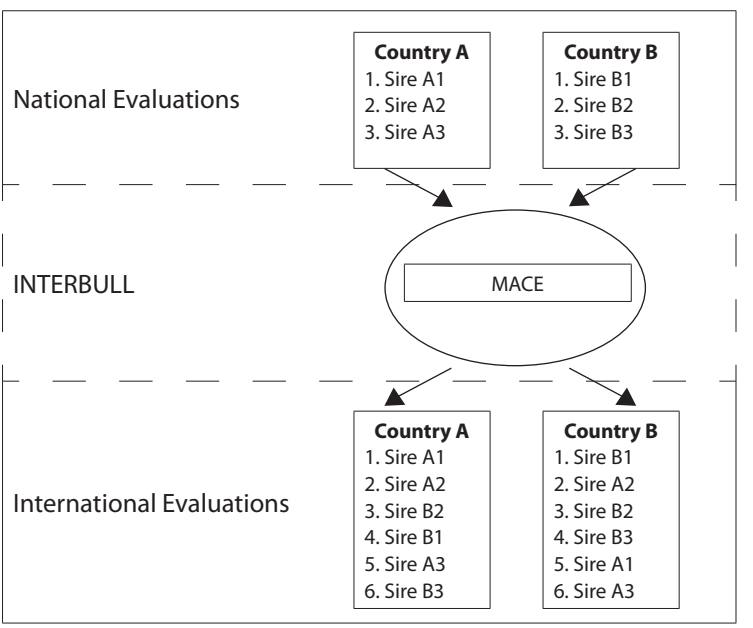

Figure 12.1 Example of International Genetic Evaluations calculated for sires

This figure shows that the International Genetic Evaluations calculated for sires from countries A and B (and their subsequent ranking's) can be different from one country to the next .A separate list of International Genetic Evaluations for all traits and sires evaluated is provided to each member country, expressed in their own units and relative to their own base group of animals. This provides the advantage of individual countries being able to identify those animals from around the world that will perform best under their own unique farming conditions. Currently, results are made available to member countries four times per year (February, May, August, and November) and involves/comprises more than 140,000 bulls of six breed groups.

Interbull does not rank animals in any way and only calculates breeding values on the different country scales. Member countries are responsible for ranking sires using their own breeding objectives, and publishing the results.

International genomic evaluations

The amount of information necessary to implement genomic selection schemes and the speed of the scientific development in the field of application of genomic technology impose the need for international cooperation. INTERBULL has already established the international genomic evaluations service for the seven main Brown Swiss populations. In addition, it offered possibilities for networking by organizing annual international workshops, developed procedure for validation of national genomic breeding values and for comparison of GEBV. Its programs include the establishment of the international database of genomic information that would

- facilitate exchange between INTERBULL customers with well-established standards and protocol
- reduce costs and optimize investments by reducing duplication,
- improve reference population for predicting enhanced genetic merit, especially for low heritability functional and health traits,
- make it possible to screen large populations for causative mutations and genetic defects,
- maintain a worldwide parentage verification database,
- use genomic data to study diversity within and among the bovine populations. (Durr and Philipsson 2012).

Organization and costs of milk recording

Initially, the state was the organizer and the main or even exclusive source of funds for milk recording. States supported milk recording as a tool for the attainment of strategic objectives related to increases in milk production at national and, in the case of the EU, regional levels. State owned agencies or non-governmental organizations financially supported by the state carried out milk recording. The process of transfer of responsibilities of milk recording and genetic improvement of cattle from the state to associations and private companies started some twenty years ago. Presently, producer's associations, cooperatives and private companies carry out milk recording in EU Member States. There are usually more recording organizations per country. Some organizations are expanding their operations to neighboring countries thus becoming sort of global players.

The process of privatization has been accompanied by the transfer of costs form the state to milk producers. The present day situation varies between and even within countries. In some countries, farmers pay 100% of costs of milk recording. In some countries, the state provides financial support varying from 30 to 60% of total costs.

Costs of milk recording vary between the equivalent of 100 to 150 kg of milk. ICAR has organized the system of monitoring of costs of milk recording. It provides its members with information on best practices and activities that may contribute to the lowering of costs.

As for the future developments, it could be expected that states would shortly complete their "withdrawal from business" and leave it in hands of private entities. Multinationals active in production and trade in genetic material could become the main players and the source of funds for milk recording.

With public subsidies and the unfolding separation of recording schemes for farm management and genetic selection purposes, there will be structural changes in the recording organizations. The influence of the breeding industry in the recording business will probably be strengthened because governments will hand over their involvement increasingly to industry and the breeding section of the industry appears to be the strongest client. Various models of development, however, are likely because of different cultural backgrounds and present attitudes:

"farmer cooperative model": the farmer cooperative closely integrates with the breeding industry, with almost total dominance in the recording business. Examples are Denmark, Holland and New Zealand

"farmer extension model": the farmer cooperative is organizationally separate from the breeding industry, but with strong linkages to specialized extension services, e.g. for dairy farmers. Examples of this are France and to some extent Germany;

"free market model": This appears to be favored in countries with dairy farms of a larger size, such as the UK, the USA and Australia.

No matter what the organizational structure will be, cost-saving mergers of adjacent organizations or the take-over of less efficient organizations by the more successful ones is likely. This development will not be stopped by political boundaries, especially in the case of smaller countries, but it will be strongly influenced by historical and cultural factors. Whether global solutions in productivity recording will emerge or should be pursued is an open question. There appears to be a lesser need for globalization in the recording business than in genetic evaluation and the quality control regarding the validity of results that national governments may exert throughout their recording organizations should not be underestimated. (Meyn et al 2001)

Genomic era – the use of genomic data in genetic evaluation – will impose the need for restructuring of recording business. The need for large reference population and phenotyping of all facilitate production and functional traits relevant to the attainment of breeding objectives will stimulate international cooperation also in animal recording.

References

- Meyn, K., J.-C. Mocquot & B. Wickham A prospective view of animal recording, ICAR Technical Series 5, Rome 2001
- Caja, Gerardo, J.J. Ghirardi, M. Hernández-Jover & D. Garín: Diversity of animal identification techniques: from .fire age. to .electronic age, ICAR Technical Series 9, Rome 2004
- Van der Werf, J.: Livestock straight-breeding system structures for the sustainable intensification of extensive grazing systems; ICAR Technical Series 3, Rome 2000
- Regulation of the European Parliament and of the Council amending Regulation (EC) No 1670/2000 as regards electronic identification of bovine animals, European Commission, 2011/0229, Brussels, 2011
- Goodall, E. A. and D. Sprevak A Bayesian estimation of the lactation curve of a dairy cow, Animal Production, 40, pp189-193, Cambridge, 1985
- 2006/427/EC: Commission Decision of 20 June 2006 laying down performance monitoring methods and methods for assessing cattle's genetic value for pure-bred breeding animals of the bovine species (notified under document number C(2006) 2376) (Text with EEA relevance)
- ICAR Guidelines, ICAR, Rome, 2011, www.icar.org
- Bagnato A. and A. Rosati: Animal selection: the genomic revolution, Animal Frontiers, Volume 2, No. 1, ASAS – EAAP – CSAS, Champaign, IL, USA, 2012
- Schefers J.M. and K.A Weigel: The development and application of genomic selection as a new breeding paradigm, Animal Frontiers, Volume 2, No. 1, ASAS – EAAP – CSAS, Champaign, IL, USA, 2012
- Spehar, Marija, M. Stepec, K. Potocnik: Nova svojstva u genetskoj procjeni goveda, Zbornik predavanja, HPA, Zagreb, 2011
- Durr, Joao, J. Philipsson: International cooperation : A pathway for cattle genomics, Animal Frontiers, Volume 2, No. 1, ASAS – EAAP – CSAS, Champaign, IL, USA, 2012

13. CHAPTER Herd Projection in Dairy Cattle Herds

Prof. Dr. Numan AKMAN

13.1 Introduction

Documents drafted with a view to projecting the number of animals in various groups of a herd at any period of time by predicating it on biological characteristics of cattle and technical parameters regarding dairy cattle farming are called **"dairy herd planning"** or **"dairy herd projection".**

A herd planning, first of all, must provide an opportunity to project when major tasks will take place in a dairy cattle enterprise and how many animals will be subject to these tasks. For instance, when the number of cows and their calving time are known, then it would be possible to calculate the number of calves to be raised in any period under certain circumstances as well as the number of veals, heifers and bulls. With such information, one can make highly correct projections with regard to any requirements (shelter, feed, labor, semen etc.) and the production (milk, the number of cattle likely to be sold, manure etc.) of an enterprise.

Without a herd planning, it is out of question to make fair evaluations and correct projections with regard to the future of an enterprise and it would not be possible to come up with a reasonable feasibility study for that enterprise. In short, the herd planning sets up an infrastructure opening doors for a proper monitoring and evaluation of the future of an enterprise in dairy cattle business. This infrastructure, in addition to above-listed benefits, helps the employer and/or the business manager easily awaken to deviations from what is planned and identify causing practices and overcome problems.

Dairy cattle-breeding is directly related to hitting the mark in productivity numbers for real-like projections of future productions and requirements in an enterprise and the number of animals in future periods (months, years), age structure of the herd and many others. For that matter, the person or persons who will work on the herd planning must be knowledgeable with strategies to be followed and characteristics to be considered as well as corresponding numbers of these characteristics or be able to make reasonable projections.

13.2 Considerations in Preparation of Herd Planning

A dairy cattle herd is regarded as a multi-member living organism composed of cattle at various ages and status. As a member of this organism, each cattle is replaced by one

another in due time. A major part of those culled out of this organism is an essential source for members to join the herd. In other words, a part or all of replacement animals in the herd were given birth by older female cattle (cows of the herd). It is possible to add members born in other farms to the herd at times. Those joining the herd usually replace the ones that are culled from the herd due to aging, death, slaughter or sale.

No matter what the motive is cows eliminated in a dairy cattle herd are called **'culled'.** The rate between the number of animals culled due to factors including death and the total number of cows is called **'culling rate'.** If the number of animals in the herd will be steady, then pregnant heifers as much as those culled from the herd must proceed to their first lactations within the same period. The rate between the number of cows proceeding to the first lactation and the total number of cows is known as **'replacement rate'.** If the number of cows in the herd is steady, then the herd replacement rate and culling rate would be equal. If the number of cows will be increased, then the replacement rate must be bigger than the culling rate.

Preparation of a herd planning requires projections with regard to the calving interval, survival rate of all age groups and pregnancy rates of heifers. In examples, **'calving interval'** is 12 months. The calving interval in dairy cattle enterprises is usually longer than 12 months. One might argue that this would lead to a deviation in the herd planning. When the entire year is divided into four equal periods, the failures as a result of extending the calving interval for an extra 1 to 1.5 months would be avoided to a certain extent.

As specified before, one of the fundamental parameters of herd planning is 'survival rate' or "mortality rate. In examples, the survival is considered only for young animals and then a survival rate is specified for each three-month age group. When it comes to the cows, a 'transition rate' is referred for those that were able to make it to the next lactation number. Since transition rate encapsulates the vitality, the mortality rate or survival rate are not taken into account.

Pregnancy rates of heifers and the first calving year, as well, require projections. In instances of this study, the first calving age is 24 months as the pregnancy rate of heifers is 0.90. The study elaborates on necessary changes to be made in herd planning when the first calving age goes up.

The number and/or the rate of animals selected and culled vary some factors such as the first calving age and the pregnancy rate. . It is, therefore, impossible to make projections with regard to numbers to be valid in all herds for abovementioned characteristics. In other words, those who will prepare a herd planning have to come up with numbers peculiar to herds they are going to study on.

13.3 Characteristics of a Dairy Cattle Herd

Animals in a dairy cattle herd can be divided into three groups; **'cows', 'young females'** and **'young males'.** Age and sex are the main factors taken into account when it comes to the

grouping of young females and male animals not selected for breeding and naming of these groups. Those having given birth are called **'cows'.** The cows are usually grouped according to lactation number and/or age. Abiding by this approach, the groups in a dairy cattle firm and their relevant characteristics are summarized as follows.

Calves: The calves are the youngest member of a cattle herd. Male and female cattle at an age range of 0-6 months are called **'calves'.** When this definition and breeding conditions are considered all together, the calves are divided into two groups; **'milk feeding calves'** and **"weaned calves'.** The number of calves in an enterprise in any period of a year varies on:

- The number of cows in the farm,
- The pregnancy rate of cows,
- Distribution of births through years,
- The age of sale for calves and the mortality rate of calves.

If the available number of calves will be considered in the evaluation of herd fertility in an enterprise, then one must be informed about the above-listed factors.

Weaned Calves (Veals): Those older than 6 months but younger than 13 months (male and female cattle between 7 and 12) are called **"veal".** In addition to factors having an impact on the number of calves, the total number of veal in an enterprise in any period of a year varies on the survival rate within the period until the evaluation time.

Heifers: Female cattle older than one year are called **'heifers'** until they give birth. In other words, a heifer is the cattle older than 12 months but that has not calved yet. The first calving age is 24 months in the herd as the time a female can spend as a heifer is approximately 12 months. If the first calving age in an enterprise is 27 or 30 months instead of 24 months, then the number of heifers that an enterprise will have in order to sustain the herd would increase. Since the 25-month female cattle in an enterprise the first calving age of which is 24 months promote to cow status, those in the enterprises the first calving age of which is 27 months would still remain within the heifer group.

Heifers undergo many major practices until they reach the age they will give their first birth in. The first of these is the monitoring of their oestrus signs. Those reaching to a certain age and weight must be monitored to make use of them for the first insemination. Then, there must be a research into whether the inseminated ones are pregnant or not. Taking these principles into account, the heifers can be divided into two categories:

- Uninseminated heifers (usually younger than 15 months) and
- Inseminated heifers.

Inseminated and pregnant heifers can be grouped in three categories: The heifers in the first, middle and the last period of pregnancy.

Male cattle: As specified before, the male cattle above 0-6 months of age are called **'male calves'** as those above 7-12 months of age are named **'male veal'.** Male cattle above 12 months of age are named **'bulls'.**

In a dairy cattle enterprise, male cattle undergo different practices than the female ones as what is expected from them differs from each other. The way male cattle are evaluated does not have a substantial impact on the future of a herd. This would provide an enterprise with an opportunity of maneuvering for the evaluation of males. For instance, there are some enterprises that sell their one-week old male calves as well as those breeding and fattening them. The fattening process usually is completed at 16-18 months of age in dairy cattle enterprises rearing male calves for fattening. It is likely, on other hand, to sell male cattle at an early age namely 6 months or 12 months of age. In instances regarding the herd planning, the males will be assumed to be kept in enterprises until they are 16-18 months old. If an enterprise sells their male cattle at an earlier age, the periods following the age in which the sale took place must not be included in herd planning.

13.4 Preparation of a Herd Planning

First of all, the animals in the enterprise will be composed of three main groups while working on a herd planning. These groups are respectively; **'cows', 'young females'** and **'young males'.** Based on the 'lactation order or lactation number', the cow group will be divided into sub categories. It is safe to name and order these sub categories as cows in the 1st, 2nd and (so forth) lactation order. One must know the number of cows making it to the next lactation in order to project the number of cows in each lactation order. This variable number, to be referred as **'transition rate (t)',** cannot be the same for each lactation order. In addition, transition rates to various lactation orders vary on breeds and on herds when it comes down to the same breed. Whoever will prepare these herd plans, therefore, must at first make use of information to be obtained from current sources of information or similar enterprises and come up with fair numbers for **'transition rates'** that are called the rates of cows making it to the next lactation from the previous one. Being informed about these numbers enables one to project the number of cows in each lactation order. The way to project all of this will be elaborated later.

Following the calculation on the number of cows in each lactation group, one must monitor what kind of developments **'young females'** and **'young males'** composed of calves to be born each year will come across with. This procedure may seem very easy at first sight. The births within a herd are usually yearlong. In other words, it would be wrong to assume that the cows give birth within the same month. It is safe to assume that the cows in a large dairy cattle enterprise give birth in each week or month of the year. That, however, prolongs the procedure. Dividing a year into four equal periods (quarters) and assuming the cows give birth at the beginning of each period make things easier in many aspects. Instances and comments in this study aim at complying with this concept.

13.4.1 Cows within a Herd Planning

Not all of the cows in a herd are at the same age and/or lactation order. The herds composed of cattle at the same age have cows at various lactation orders in 2-3 years. The considerations in calculating the number of cows at various lactation orders in a herd planning are as follows:

- What the biggest lactation order will be. In other words, how much lactation a cow in a herd can give in the maximum?
- What the transition rates (t) of cows to consecutive lactations will be. For instance, what percentage of the cows in the 1st lactation can make it to the 2nd lactation or what percentage of cows can make it from 6th to 7th lactation.
- Whether the herd will be composed of pregnant heifers or cows with various age groups.
- Being knowledgeable with fair numbers or deciding on them to know what percentage of cows will be culled.

Each enterprise subject to the herd planning will either embark on pregnant heifers or have cows with various lactation orders. What should be done does not differ from each other in both cases. What is important here is the identification of fair numbers for above-listed issues and properly making use of these numbers.

The speed or rate of culling in dairy cattle herds is substantially related to the number of the biggest lactation order and transition rates. In other words, knowing about the number of lactation groups and transition rates helps to calculate the culling rate. If there is no other information other than the culling rate, it would not be possible to correctly project the number of cows in each lactation order.

There are various motives for culling in a dairy cattle herd. The culling rate, therefore, is not the same in each herd. It is generally suggested that genotypes with low milk yield are low in culling rate as the herds with high milk yield are high in culling rate. Enterprises to carry on a business with the Holstein race will have 30 % culling rate as stipulated. This means that 30 cows out of 100 will be culled from the herd every year because of various reasons. This number can be useful in calculation of the number of pregnant heifers to join the herd every year or the cows to proceed to the 1st lactation. In case the number of cattle in a herd will be steady, a number of heifers equal to 30 % of the herd must proceed to the 1st lactation. If one would like to expand the herd, then the number of pregnant heifers to be included in the herd must be more than that. If the number of heifers to be included in the herd is less than that, the number of cows in that enterprise will decrease.

In short, it is safe to say that the culling rate depending particularly on milk yield level of dairy cattle herds and management quality as well as many other factors is usually above 25 % and that can rise to even 40 % in some herds. The fact that the culling rate in a herd is 40 % means that 40 % of cows in this herd are culled each year or almost all of the cows in the herd replace one another every 2.5 (1/0.40) years.

It is suggested that a Holstein cattle enterprise would have 5 to 7 lactation groups. It is, however, likely to come across with cows that are in subsequent lactation orders than the lactation order regarded as upper limit even though they are in a limited number. It would not be wrong to evaluate all of this incorporating them into the last lactation order. On such an occasion, it would be beneficial to write down the last lactation order as in 7+ instead of 7.

In the following chapters, the rate of those being able to make it to next lactation order will be hereafter called **'transition rate'** and symbolized with the letter **'t'.** The rate of those proceeding to the 1st lactation in the herd is g_1 and the rate of those making it from the 1st lactation to the 2nd lactation is symbolized with t_2 as the rate of those making it from the 2nd lactation to the 3rd lactation is t. This number can be useful in the calculation of the culling rate for cows in the relevant lactation order (Transition rate= 1- Culling rate or Culling rate= 1- Transition rate). For whatever reason it is, the basis of this calculation is to regard those that were not able to make it to the next lactation as **'culled'.** When it comes to the dairy cattle farming, this approach that does not require separately taking the survival rate into consideration is not at fault.

When 7 lactation groups are listed as 1st, 2nd, 3rd,……and 7th and the number of cows in each lactation group are symbolized as n_1, n_2,…. and n_7, the total number of cows (N) can be formulized as $N=n_1+ n_2+ n_3+ n_4+ n_5+ n_6 +n_7$; or $N= \sum_{i=1}^{k} n_i$; (k=7). If this suggestion and previously specified definition of transition rate are taken into consideration, $\mathbf{n_1*t_2}$ of the cows in the 1st lactation are expected to make it to the 2nd lactation and the number of cows in the course of this lactation to be $\mathbf{(n_2); n_1*g_2}$. In the same vein, if the transition rate with regard to making it from the 2nd lactation to the 3rd lactation is t_3, them the number of cows in the 3rd lactation is calculated in $\mathbf{n_3=n_2*t_3=n_1*t_2*t_3}$. It must be remembered that the transition rates may vary in the herds with the same culling rate. For instance, all of the pregnant heifers in a herd may proceed to the 1st lactation (t_1=1.00) as the rate of those proceeding to the 1st lactation in some other herd may be %98 (t_1=0.98). In the same vein, the transition rate for lactation orders in a herd is not alike. For instance, 80 % of the cows in the 1st lactation are able to make it to the 2nd lactation as the rate of those making it from the 3rd lactation to the 4th one may remain at 70 %.

Table 13.1 displays the total number of cows in an enterprise as N, the number of cows in the first lactation as n_1, the transition rates for the next lactation orders and the potential number of cows in various lactation orders calculated with the help of these rates. As clearly seen in Table 13.1, the number of cows in the 2nd or subsequent lactation orders can be calculated grounding on the number of those in the 1st lactation (n_1). First of all, **'T'** number must be calculated making use of equations in the last line of Table 13.1. When it comes to the transition rate in the 3rd column, 'T' is number of cows for the herd in terms of the number of cows (n_1) in the first lactation ($N=n_1*T$). When the number of cows in the herd is N, the number of cows in the 1st lactation (n_1) is calculated in N/T.

Table 13.1 The number of cows in various lactation orders

Transition periods		Transition rates[1]	The Number of Cows in Lactation Group	
Previous Status	Subsequent status		Symbol	number in n_1
Pregnant Heifer	1.Lactation	t_1	$n_1=$	n_1
1.Lactation	2.Lactation	t_2	$n_2=$	n_1*t_2
2.Lactation	3.Lactation	t_3	$n_3=$	$n_1*t_2*t_3$
3.Lactation	4.Lactation	t_4	$n_4=$	$n_1*t_2*t_3*t_4$
4.Lactation	5.Lactation	t_5	$n_5=$	$n_1*t_2*t_3*t_4*t_5$
5.Lactation	6.Lactation	t_6	$n_6=$	$n_1*t_2*t_3*t_4*t_5*t_6$
6.Lactation	7.Lactation	t_7	$n_7=$	$n_1*t_2*t_3*t_4*t_5*t_6*t_7$
Total Number of Cows (N)			$N=n_1+n_2+n_3+n_4+n_5+n_6+n_7$; $N=n_1*[1+t_2+t_2*t_3+t_2*t_3*t_4+t_2*t_3*t_4*t_5+t_2*t_3*t_4*t_5*t_6+t_2*t_3*t_4+t_5*t_6*t_7]=n_1*T$	

Regarding the number of cows in the enterprise as 100 heads, it is possible to see in Table 13.2 how to calculate the number of cows in each lactation order. As seen in Table 13.2, the number of cows in the 1st lactation is calculated as in n_1=N/t =100/3.638=27.5=~28 heads when the total number of cows is regarded 100 heads. Following the calculation for the number of cows in the first lactation, it would be easier to calculate the number of cows in rest of the lactation orders. For instance, the number of cows in the 2nd lactation can be calculated by multiplying the number of those in the 1st lactation order by 0.85 (g_2) which is the transition rate for 2nd lactation (27.5*0.85=~23 heads). The numbers of cows in other lactation orders is displayed in Table 13.2.

When the transition rates in Table 13.2 are in effect, approximately 28-head pregnant heifers must be included in the relevant herd as cows every year in order to keep the number intact in an enterprise with 100 cattle. Such information can be helpful in the calculation for the number of pregnant heifers to be potentially sold as well as the number of females at any age and to be kept in the herd except for cows. These matters will be separately touched upon later.

[1] Transition rates are not supposed to be same. If the transition rates in all lactations are considered equal and as **'t'** (in other words, if it is $g_1=g_2=\ldots g_7=g$, the number of cows in the 1st lactation is calculated through (n_1); $n_1= N*(1-g)/(1-g^k)$ equation in a herd with N number of cows when the number of lactation group is as much as **'k'**). The number of cows in the following lactation orders is calculated by multiplying the number of cows in the previous lactation with the transition rate't'.

Table 13.2 Calculation of the number of cows in each lactation number for a herd with 100 cows

Lactation Number	Transition Rates	The relation of the number of cows in each lactation number with the number of cows in the first lactation order	The number of cows in each lactation when the total 100 cows
1	1.00	1.000	n_1=100/3.638=27.5 ~ 28
2	0.85	0.850	n_2=27.5*0.85=23.4 ~ 23
3	0.75	0.638	n_3=27.5*0.638=23.4*0.75=17.5 ~ 18
4	0.75	0.478	n_4=27.5*0.478=17.5*0.75=13.1= ~ 13
5	0.70	0.335	n_5=27.5 *0.330=13.1*0.70 = 9.2= ~ 9
6	0.65	0.218	n_6=27.5 * 0.218 = 9.2* 0.65 = 6.0 ~ 6
7	0.55	0.120	n_7=27.5*0.120 = 6.0 * 0.55 =3.3 = ~ 3
Total Number of Cows (N)		**n_1* 3.638; (3.638 = T)**	**N=n_1*T= 27.5*3.638=~100**

Herd Planning for a Newly Founded Enterprise

Herd planning is a requisite to project the future of a newly founded enterprise and to prepare a reasonable feasibility. If a newly founded enterprise procures 100 pregnant heifers and all of these heifers have proceeded to the 1st lactation, then the number of those making it to the 2nd lactation is easy to calculate. The transition rate is essential for such calculation. When the first set of the transition rates in Table 13.3 is taken as a basis, 85 cows out of 100 proceeding to the 1st lactation are able to make it to the 2nd lactation. 64 of them will be able to reach the 3rd, 48 to the 4th, 33 to the 5th and 22 to the 6th, 12 to the 7th lactation (Table 13.3). As specified and expected, the number of cows giving a start to the herd is decreasing every year. The number of female calves given birth by these cows will be increased and they will be included in the herd in order to make up for the loss. As long as the herd survives, this process will continue operate. This will be continued in future as well. In other words, some cows will be culled from herd and replaced by young ones reared in the same herd or purchased from another herds. Charter 3 displays what the difference would be between the numbers of cows in various lactation orders in a newly founded enterprise with 100 pregnant heifers if no female calf is sold.

As clearly specified in Table 13.3, the number of cows in the herd at first has decreased and then increased. When Set I is in use for transition rates, it has taken 10 years for the number of cows to be approximately doubled. For those who would like to shorten this process, it is necessary to take precautions with a view to increasing the transition rates and the pregnancy

rates for pregnant heifers as well as the vitality for young animals. If these precautions fall short and the transition rates are below the previously mentioned numbers, then the rate of increase for the number of cows will slow down. For instance, if other parameters in this herd are not changed and the transition rates decrease amounting to 5 points (When 0.85 decreases to 0.80 and 0.75 to 0.70) then the situation in the first 10 years will be like the one in the second part of Chapter 3. When Set II is in use, the number of cows has reached 148 at the end of 10 years. In other words, the number has increased one and a half time or amounting to approximately 75 % of the number calculated with the transition rates of the first set. The essential reason of this difference is the few number of cows culled from the herd and thus the increasing time the cows spend in the herd as well as increasing number of calves joining the herd. Transition rates in Set I will be the basis for following evaluations. The culling rate, which turned out to be 27.5 % when these numbers are taken as a basis, can rise to 31.0 % with the transition rate in Set II.

What has been told so far in this study must shed light on the status of cows in the future and the changes in the number of them. The part not elucidated nor missing in Table 13.3 is the background of pregnant heifers (those under the title of 'produced pregnant heifer') included in the herd following the first year. Putting this background forward properly can only be achieved by monitoring the ones born in the herd particularly the females. The following part is related to the future of female and male calves born in the herd.

Table 13.3 The number of pregnant heifers and cows in the first 10 years for two different sets of transition rates in an enterprise building up with 100 pregnant heifers

YEARS	Produced Pregnant Heifer[2]	Lactation Order							Total Number of Cows
		1	2	3	4	5	6	7	
Transition rates (SET I)		**1**	**0.85**	**0.75**	**0.75**	**0.70**	**0.65**	**0.55**	
1		100							**100**
2			85						**85**
3	39	39		64					**103**
4	33	33	33		48				**114**
5	40	40	28	25		33			**126**
6	44	44	34	21	18		22		**139**
7	49	49	37	25	16	13		12	**152**
8	54	54	41	28	19	11	8		**161**
9	61	61	46	31	21	13	7	5	**184**
10	62	62	52	34	23	15	9	4	**199**

[2] How to calculate the number of pregnant heifers is elaborated in the following chapters.

YEARS	Produced Pregnant Heifer[2]	Lactation Order							Total Number of Cows
		1	2	3	4	5	6	7	
Transition rates (SET II)		1	0.80	0.70	0.70	0.65	0.60	0.50	
1		100							**100**
2			80						**80**
3	39	39		56					**95**
4	31	31	31		39				**101**
5	37	37	25	22		25			**109**
6	39	39	29	17	15		15		**115**
7	42	42	31	20	12	10		8	**123**
8	45	45	34	22	14	8	6	0	**129**
9	49	49	36	23	15	9	5	3	**140**
10	50	50	39	25	16	10	6	2	**148**
Assumptions	It is acknowledged that the survival rate of young ones for 0-18 months is %87.6 and %85.9 for 0-24 months as the pregnancy rate of heifers is % 90 and their calving rate is %100.								

13.4.2 Young Cattle in Herd Planning

Analyzing young cattle in two different age groups makes it easier to elaborate on herd planning and have them done. For that matter, 0-12 months-old young cattle at first and then the 13-24 months old will be analyzed.

a) 0-12 Months Age Group

When a herd planning is prepared in the light of the abovementioned perspective, all the cows proceeding to the first lactation and the ones giving birth for the first time are assumed to contribute to the herd with one living calf. A part of the cows in the last lactation cannot be culled from the herd as soon as they complete the lactation process since a part of these cows might get pregnant while the last lactation is still on. Those getting pregnant while the last lactation is still on are expected to give a birth. In short, a part of the cows completing the last lactation are culled from the herd after they give one more birth. The case is likely to be same for half of the cows of the last lactation in any herd. In this case, it would be proper to calculate the number of calves born within a year in an enterprise through (CN), $CN=N+n_l/2$ equation. In this equation, 'N' stands for total number of cows as 'n_l' is the number of cows in the last lactation.

The number of male and female calves is calculated in accordance with the assumption that the half of those born would be male as the other half would be female. If the enterprise

use sexed semen, the rate for the selected sex can be 90 % and 10 % for the other sex. It is, henceforth, necessary to dwell on what age and status the newborn calves will be at within a year. In order to put this into practice in a realistic fashion and pay regard to the variation in management the young cattle undergo, 0-12 months old young cattle must be divided into two categories as female and male and then each sex must be classified as:

- 0-3 months old calves (They may drink milk till the end of the third month and they may weaned in earlier periods),
- 4-6 months old calves (weaned),
- 7-9 months old veals and
- 10-12 months old veals.

The number of young cattle in each of these groups varies on the number of cattle in the previous period and the survival rate in that period. If the enterprise sells young cattle (0-12 months old), then one must take account of the age at the time of the sale as well as the sex and quantity of those sold. In examples of this study, it is assumed that the male ones would be sold until the period subsequent to 16-18 months period of age and the female ones would not be sold but retained to increase the herd or they would be sold as a pregnant heifer.

If the picture in Table 13.3 is made steady and 0-12 months-old young cattle are taken as a basis, then the header line where the number of young cattle to be included in each of 3-month 4 groups would be written must be like as is seen in Table 13.4.

Table 13.4 Age groups for young cattle in 0-12 months-old age group

YOUNG FEMALES				YOUNG MALES			
0-3 months	4-6 months	7-9 months	10-12 months	0-3 months	4-6 months	7-9 months	10-12 months

In order to complete a table, the header of which is set up like this, one-year period must be divided into 3-month 4 groups. When this is done, the header and the first lines of the relevant Table 13.for one year would be like in Table 13.5.

Table 13.5 Age groups for young cattle in 0-12 month-old age group when one year is divided into four equal periods

YEAR	PERIOD	YOUNG FEMALES				YOUNG MALES			
		0-3 months	4-6 months	7-9 months	10-12 months	0-3 months	4-6 months	7-9 months	10-12 months
1	1								
	2								
	3								
	4								

On a Table set up like this, one can write down – starting from the first period (quarter) of that year – what age group and number of calves born in each period will be in other periods of the relevant year. It is, therefore, enough to be knowledgeable with the number of calves born and the survival of previous periods. In this instance, the vitalities in 0-3 months, 4-6 months, 7-9 months and 10-12 months are regarded to be 95 %, 97 %, 98 % and 99 % respectively. The number of 50 females and 50 males given birth by 100 cows in the first quarter of the year is calculated and written down in the 2nd, the 3rd or the 4th lines of Table 13.6.

Table 13.6 The age and the number in other quarters of the year for 50 female and 50 male calves born in the first quarter of the year

YEAR	PERIOD	FEMALE				MALE			
		0-3 months	4-6 months	7-9 months	10-12 months	0-3 months	4-6 months	7-9 months	10-12 months
Vitality		0.95	0.97	0.98	0.99	0.95	0.97	0.98	0.99
1	1	50				50			
	2		48	50.0*0.95=47.50			48		
	3			46	47.5*0.97=46.07			46	
	4	46.07*0.98=45.1			45				45

The first one of two 48s seen in Table 13.6 is the number of 50 female calves born at the beginning or in the first period of the year and reaching 4-6 months old of age as the second one is 50 male calves with the same characteristics. 46 of 48 male and 48 female calves reaching the 4-6 months old of age or of 50 male and 50 female calves born in the first quarter of the year have survived until the 3rd period of the year, which is equivalent to 7-9 months old of age. The number 46 is calculated as follows: 47.5*0.97=46.07=~46 or 50*0.95*0.97=46.07=~46. The calves born in the first quarter of the year have reached 10-12 months old of age in the last quarter of the year and it is projected that that number would decrease to 45 (46.07*0.98=44.14=~45) under the projected conditions.

Division of the year into four equal quarters while working on herd planning makes it easier to place each age group within a year. In addition, it would minimize the problems resulting from the distribution of the births in a year and enable animals procured in various periods to be easily included in the herd planning. For instance, if the first 25 % of 100 pregnant heifers have given birth in the first period, the second 25 % in the second, the third 25 % in the third, the 4th 25 % in the fourth period, then the number of calves, veals and cows for that year can be calculated as in Table 13.7.

Table 13.7 The number of cows in the first lactation and young cattle in 0-12 months old of age when one quarter of 100 pregnant heifers give birth in each quarter of the year.

YEAR	PERIOD	YOUNG FEMALES				YOUNG MALES			
		0-3 months	4-6 months	7-9 months	10-12 months	0-3 months	4-6 months	7-9 months	10-12 months
Survival Rate		0.95	0.97	0.98	0.99	0.95	0.97	0.98	0.99
1	1	13				13			
	2	13	12			13	12		
	3	13(25/2)	12	12		13	12	12	
	4	13(12.50)	12(11.88)	12(11.52)	11(11.29)	13	12	12	11

b) 13-24 Months Age Group

What has been told in the previous chapters must shed some light on the period when the cows are culled from the herd and the first year of the calves born. The first thing to be done from now on is to follow procedures to take place in the 2nd year of the herd particularly for young ones.

In a dairy cattle herd, the first breeding age and the first calving age may be 15 months and 24 months respectively for females as the slaughter age for males may be 15-18 months. In that case, it is a requisite to monitor the males until they are sold and the female ones until they give a birth. In order to monitor, one must follow the last column of young females and males in Table 13.7 and add columns with regard to 13-24 months old of age for females and 13-18 months old of age for males. The column to be added must be like the one in Table 13.8.

Table 13.8 Groups for young cattle in 13-24 months of old age group

YOUNG FEMALES				YOUNG MALES	
13-15 months (heifer)	16-18 months (pregnant heifer)	19-21 months (pregnant heifer)	21-24 months (pregnant heifer)	13-15 months	16-18 months

For a herd that has just commenced production, these columns of Table 13.8 will be void in the first year of planning. The Table to manifest itself following this addition will enable females and males to be monitored for 0-24 and 0-18 months respectively (Table 13.9).

Table 13.9 displays the first two-year herd planning for a herd commencing with 100 pregnant heifers 25 % of which give birth in each quarter of the year. When the Table is analyzed, it is clear to see that there are 21 cows proceeding to 2nd lactation in the first quarter of the second year as approximately 11 (10.5) female and 11 male calves are included in the group of 0-3 months old. 12 female and 12 male calves in 4-6 months old age column of the same line are the survivors of 13 calves given birth by 25 cows proceeding to the first lactation

in the 4th quarter of the 1st year. 13 female and male calves born in the 2nd quarter of the first year have turned into 12 veals at the age of 7-9 months in the first quarter of the second year. 13 calves born in the second quarter of the first year have become 10-12 months old of age in the first quarter of the second year and the number has decreased to 11. What have remained from those having given birth in the first quarter of the previous year are females and males reaching 13-15 months old of age in the first quarter of the second year. The female ones are inseminated in the following quarter as the pregnant ones are kept within the herd. Considering that the pregnancy test is performed between 16th and 18th months, it is suggested that non-pregnant ones are culled from the herd before they reach 19-21 months old of age. In that case, 11 (12.5*0.95*0.97*0.98*0.99=11.17=~11) of 13 (12.5) females born in the first quarter of the first year reached 13-15 months old of age as heifers in the first quarter of the 2nd year and 11 (11.17*0.99=11.06=~11) of them reaching 16-18 months old of age was inseminated as the pregnancy test had been performed prior to 19-21 months old of age and that helped to produce 10 pregnant heifers (11.06*0.99*0.90=9.86=~10). 99 % (10 (9.86*0.99=9.66=~10)) of these pregnant heifers are expected to make it to 21-24 months old of age.

With the help of the tables prepared in accordance with the abovementioned, it is possible to find out the total number of cattle in any quarter of any year by adding the total of the numbers in the column of that period to the number of cows. In the abovementioned instance, the total number of cattle in the last quarter of the first year is 196 (100+96) as it is 230 (84+146) in the last quarter of the second year (Table 13.9)

Table 13.9 The number of cows in the first two years and the number of young cattle at the age of 0-24 months in a herd where one quarter of 100 pregnant heifers give birth each year.

Year	Period	COWS			YOUNG FEMALES								YOUNG MALES						TOTAL
		1.Lactation	2.Lactation	Total	0-3 months	4-6 months	7-9 months	10-12 months	13-15 months	16-18 months	19-21 months	22-24 months	0-3 months	4-6 months	7-9 months	10-12 months	13-15 months	16-18 months	
Survival Rate					0.95	0.97	0.98	0.99	0.99	0.99	0.99	0.99	0.95	0.97	0.98	0.99	0.99	0.99	
1	1	25		100	13								13						126
	2	25			13	12							13	12					150
	3	25			13	12	12						13	12	12				174
	4	25			13	12	12	11					13	12	12	11			196
2	1		21	84	11	12	12	11	11				11	12	12	11	11		198
	2		21		11	10	12	11	11	11			11	10	12	11	11	11	216
	3		21		11	10	10	11	11	11	10		11	10	10	11	11	11	222
	4		21		11	10	10	10	11	11	10	10	11	10	10	10	11	11	230

Those born in the first quarter of the first year and reaching the last quarter of the second year as 21-14 month-old pregnant heifers have turned into cows that proceed to the 1st lactation in the first quarter of the third year. In order to monitor this relation, two extra columns with sub-titles such as 'produced' and 'joining the herd' under the title of 'pregnant heifer' are added in the Table 13.9 prior to the column of cows as the first 3 years of the Table to be used in preparation of herd planning are displayed in Table 13.10. In preparation of Table 13.10, the survival rate and the pregnancy rate in each three-month period of 13-24 months old of age are regarded to be 99 % and 90 % respectively in addition to previous pre-suppositions.

As seen in Table 13.10, 10 cattle proceeding to the last quarter of the second year in 22-24 months old of age as pregnant heifers have turned into 10 cows (10*1.0*0.99)=9.9=~10) proceeding to the 1st lactation in the first quarter of the 3rd year since the pregnancy rate of this old pregnant heifers are regarded to be as 100 % and the survival rate as 99 %. All of these cattle have joined the herd since it is projected that the number of cows would increase. An enterprise, under normal conditions, adopts one of the two strategies as in increasing the number of cows or keeping it steady. Those preferring to increase the number of cows usually put an upper limit. In the end of the chapter, the first 10 year herd planning are displayed (ANNEX I and ANNEX II) for an enterprise that has each pregnant heifer joined the herd and an enterprise that has increased the number of cows after a certain number.

Fixation on the Number of Cows

An enterprise willing to keep the number of cows steady in a herd usually does so deciding on the number of heifers to proceeding to the first lactation. How to do so are is as follows for an enterprise procuring 100 pregnant heifers and carrying on production of 100 cows. The number of cows for such an enterprise, under previously specified conditions, would be 104 in the 3rd year as seen in Table 13.10. The number attained is bigger than the projected. If the enterprise ignores this difference and refuse to sell pregnant heifers and/or cows, then the number of cows would be 112 in the 4th year (ANNEX I). The enterprise, however, has a capacity for 100 cattle and would not like to make more cows available. In this case, it is possible to calculate the number of pregnant heifers to join the herd in years or how many pregnant heifers and/or breeding cows can be sold.

Table 13.10 The number of cows, pregnant heifers and 0-24 month-old young cattle in the first 3 years in a herd where one fourth of 100 pregnant heifers give a birth in each quarter of the year

Year	Period	PREGNANT HEIFER		COWS				YOUNG FEMALES								YOUNG MALES						TOTAL
		Produced	Joining the Herd	1.Lactation	2.Lactation	3.Lactation	Total	0-3 months	4-6 months	7-9 months	10-12 months	13-15 months	16-18 months	19-21 months	22-24 months	0-3 months	4-6 months	7-9 months	10-12 months	13-15 months	16-18 months	
Survival and transition rate				1.00	0.85	0.75		0.95	0.97	0.98	0.99	0.99	0.99	0.99	0.99	0.95	0.97	0.98	0.99	0.99	0.99	
1	1			25			100	13								13						126
	2			25				13	12							13	12					150
	3			25				13	12	12						13	12	12				174
	4			25				13	12	12	11					13	12	12	11			196
2	1				21		84	11	12	12	11	11				11	12	12	11	11		198
	2				21			11	10	12	11	11	11			11	10	12	11	11	11	216
	3				21			11	10	10	11	11	11	10		11	10	10	11	11	11	222
	4				21			11	10	10	10	11	11	10	10	11	10	10	10	11	11	230
3	1	10	10	10		16	104	13	10	10	10	9	11	10	10	13	10	10	10	9	11	250
	2	10	10	10		16		13	12	10	10	9	9	10	10	13	12	10	10	9	9	250
	3	10	10	10		16		13	12	12	10	9	9	8	10	13	12	12	10	9	9	252
	4	10	10	10		16		13	12	12	12	9	9	8	8	13	12	12	12	9	9	254

The number of heifers to be produced by the enterprise in the third year is 40 as seen in Table 13.10 and 13.11. The total number of cows in the 2nd or subsequent lactation number (the group contains only the ones in the 3rd lactation this year) is 64 for the same year. 100-64= 36 would be enough for the number of pregnant heifers to be born in the herd in order to increase the number of cows to 100. Remaining 4 pregnant heifers (40-36) will be sold for breeding. The status of the herd in the 4th year is also dwelled on in an effort to have a good grasp of the matter. As seen in Table 13.11, the production of heifers in the 4th year amounts to 32 as the total number of cows in the 2nd or subsequent lactation orders is 80. In order to increase the number of cows to 100, 20 (100-80) pregnant heifers will proceed to the 1st lactation as the remaining 12 (32-20) pregnant heifers will be sold for breeding. As seen in these instances, the number of pregnant heifers to join a herd in which the number of cows will be steady is the difference between the projected number of cows and the total number of cows in the 2nd and subsequent lactation orders.

Some enterprises are likely to keep the number of cows at a certain level. Annex II elaborates on the first 10-year herd planning for an enterprise with a capacity of 140 cows but having commenced it with 100 pregnant heifers. As seen Annex II, the number of cows

in the 2nd-7th lactation orders in the 7th year would be 100 when the number of cows (140) is kept steady. The number of pregnant heifers required, therefore, is 40. The enterprise, on the other hand, has 48 pregnant heifers. In this case, the enterprise are supposed to have at least 40 pregnant heifers joined the herd and sell 8 pregnant heifers and/or cows. The enterprises, with the pressure of market demands, usually sell pregnant heifers. In a similar way, the number of pregnant heifers that an enterprise sells is 12 in the 8th year, 20 in the 9th and 16 in the 10th years (ANNEX II).

Table 13.11 The first 4-year herd planning for an enterprise with a capacity of 100 cows and building up with 100 pregnant heifers the one fourth of which give a birth in each quarter of the year

Year	Period	HEIFER			COWS									YOUNG FEMALES							
		Produced	Joining the Herd	Sold in Breeding	1. Lactation	2. Lactation	3. Lactation	4. Lactation	5. Lactation	6. Lactation	7. Lactation	2-7 Lactation	TOTAL NUMBER of COWS	0-3 months	4-6 months	7-9 months	10-12 months	13-15 months	16-18 months	19-21 months	22-24 months
Survival and Transition Rate					1.00	0.85	0.75	0.75	0.70	0.65	0.55			0.95	0.97	0.98	0.99	Each period:0.99 Pregnancy Rate:0.90			
1	1				25								100	13							
	2				25									13	12						
	3				25									13	12	12					
	4				25									13	12	12	11				
2	1					21						21	84	11	12	12	11	11			
	2					21						21		11	10	12	11	11	11		
	3					21						21		11	10	10	11	11	11	10	
	4					21						21		11	10	10	10	11	11	10	10
3	1	10	9	1	9		16					16	100	13	10	10	10	9	11	10	10
	2	10	9	1	9		16					16		13	12	10	10	9	9	10	10
	3	10	9	1	9		16					16		13	12	12	10	9	9	8	10
	4	10	9	1	9		16					16		13	12	12	11	9	9	8	8
4	1	8	5	3	5	8		12				20	100	13	12	12	11	11	9	8	8
	2	8	5	3	5	8		12				20		13	12	12	11	11	11	8	8
	3	8	5	3	5	8		12				20		13	12	12	11	11	11	10	8
	4	8	5	3	5	8		12				20		13	12	12	11	11	11	10	10

In aforementioned arguments, the birth time for the pregnant heifers that is a key factor in founding an enterprise, must be spread out over the year. The enterprise, however, may have procured heifers in a way to enable them to give a birth within 3 or 6 months. If that is the case, herd planning must include, in Table 13.11, the number of heifers to give a birth

in each quarter. For instance, if 60 of 100 procured heifers give a birth in the 2nd quarter and the remaining 40 do the same in the 3rd quarter, then the column for the number of the 2nd quarter in the first year corresponds to 40 as it does to 40 for the 3rd quarter. The column for the 1st and the 4th quarters would be void. If the enterprise is founded along with pregnant heifers to give a birth within approximately 3 months, then the column for the quarter they give a birth in is titled with 'the number for heifers giving a birth' as other quarters will be void. The first 4 years of the herd planning for such an enterprise are as follows in Table 13.12. As seen in Table 13.12, this enterprise is supposed to have 114 cows in the last quarter of the 4th year, 51 veals in a 10-12 month-old age group, 40 heifers in a 22-24 month-old age group and 51 male veals in a 10-12 month-old age group.

Table 13.12 The number of cows, pregnant heifers and young cattle in a 0-24 month-old age group in the first 5 years for an enterprise with 100 pregnant heifers giving a birth in the first quarter of the year

Year	PERIODS	PREGNANT HEIFER		COWS								YOUNG FEMALES								YOUNG MALES					
		Produced	Joining the Herd	1. Lactation	2. Lactation	3. Lactation	4. Lactation	5. Lactation	6. Lactation	7. Lactation	TOTAL	0-3 months	4-6 months	7-9 months	10-12 months	13-15 months	16-18 months	19-21 months	22-24 months	0-3 months	4-6 months	7-9 months	10-12 months	13-15 months	16-18 months
Vitality and Transition Rate				1.00	0.85	0.75	0.75	0.70	0.65	0.55		0.95	0.97	0.98	0.99	0.99	0.99	0.99	0.99	0.95	0.97	0.98	0.99	0.99	0.95
1	1			100							100	50								50					
	2												48								48				
	3													46								46			
	4														45								45		
2	1				85						85	43				45				43				45	
	2												40				44				40				44
	3													39				39				39			
	4														38				39				38		
3	1	39	39	39		64					103	51				38				51				38	
	2												49				38				49				38
	3													47				34				47			
	4														46				33				46		
4	1	33	33	33	33		48				114	57				46				57				46	
	2												54				45				54				45
	3													52				40				52			
	4														51				40				51		

13.5 Calculation for Items of Income

The milk is the primary source of income for a dairy cattle enterprise. In addition, the manure must be considered as an item of income if it is utilized with animals sold. New and growing members of the herd provide an increase in value as cows' value decreases in parallel with aging. In other words, the herd is composed of animals with an increasing and decreasing value. One must calculate, therefore, whether there is any variation for the value of the herd that is to say whether there is 'an increase in value of the livestock. Taking all the animals of the herd into account, the difference in their total values to be calculated for the beginning or the end of the year can be utilized to that end.

Animals in an enterprise are not necessarily sold as livestock. Some animals must be slaughtered and/or sold as a carcass at times. Such animals are among the items of income as well. In short, the items of income in a dairy cattle enterprise are:

- Milk,
- Pregnant heifer,
- Male calf or veal, (beef if fattened and sold),
- Non-breeding heifers (heifer meat if slaughtered and sold),
- Selected or culled cows (beef if slaughtered and sold),
- Manure and
- Increase in value of livestock.

In addition to the number of animals in herd planning, calculating the income generated from aforementioned items requires productivity per animal and/or prices. Making use of this relation, the next chapter will elaborate on how to calculate production values subject to the income. Should the need arise for calculating the direct income instead of production values, then it would be enough to multiply production values and the number of animals by prices.

13.5.1 Milk Production

Milk production is calculated multiplying the number of cows milked within a year by lactation milk yield per cow. As it is known, the lactation milk yield varies on the duration of lactation and lactation number. The calculation of milk production, that is why, requires 10-month (305-day) milk yield. If required, separate milk production is considered for each lactation number. If any precision is not necessary at this level, then the total milk production can be calculated multiplying the average milk yield adopted for a herd by the number of cows.

Table 13.13 displays the milk production (MP) for the 2nd, the 6th and the 10th year under conditions where the number of animals in the herd is limited to 140. As specified before, this is calculated multiplying the lactation milk yield (mi) at the top row of the Table by the number of cows in that lactation number (ni) and adding the numbers attained in all lactation orders ($MP = \sum_{i=1}^{k} m_i * n_i$).

No matter what quarter they give a birth at, the lactation milk productivity for cows is recorded below the birth year. In case this is regarded as a defect, then it is safe to calculate how much each group would lactate in years the lactation begins and ends. In this case, it is assumed that those giving a birth in the first quarter of the year have completed their lactations but the lactations for those giving a birth in the 2nd, the 3rd, and the 4th quarters would be 7.5, 4.5 and 1.5 respectively. In addition, the milk production in each three month of the lactation can be taken into consideration if required instead of the lactation milk yield. No matter how it is calculated, there would no substantial difference in terms of projected annual milk production particularly in forthcoming years for herds in which the number of cows is kept steady.

Table 13.13 The milk production in the 2nd, the 6th and the 10th year for an enterprise building up with 100 pregnant heifers and having a capacity of 140 cows (the cow numbers taken from Annex II)

Year	Period	COWS							TOTAL	MILK PRODUCTION, tone	
		1. Lactation	2. Lactation	3. Lactation	4. Lactation	5. Lactation	6. Lactation	7. Lactation			
Lactation milk production, t		5.6	6.2	6.7	6.9	7.0	6.8	6.8		PERIOD	YEAR
2	1		21						84	130.2 (21*6.2)	520.8
	2		21							130.2	
	3		21							130.2	
	4		21							130.2	
6	1	11	8	5	5		5		136	213.2	852.8
	2	11	8	5	5		5			213.2	
	3	11	8	5	5		5			213.2	
	4	11	8	5	5		5			213.2	
10	1	10	7	7	4	4	2	1	140	222.3	889.2
	2	10	7	7	4	4	2	1		222.3	
	3	10	7	7	4	4	2	1		222.3	
	4	10	7	7	4	4	2	1		222.3	

13.5.2 The Number of Culled Cows

Those unable to make it to the next lactation are regarded as 'culled' cows in a dairy cattle enterprise. The number of culled cows in a year can be calculated through the number of cows in the following year. To do so, the number of cows in the second lactation of the 2nd year must be subtracted from the number of cows in the first lactation of the 1st year. Then, the same procedure goes for other lactation orders until the number of cows in the 7th lactation of the 2nd year is subtracted from the number of cows in the 6th lactation of the 1st year. Finally, the number of culled cows would be attained by adding the total number attained for all quarters to the total number of cows in the last lactation order of the 1st year. The Table 13.14 displays how to calculate this by making use of the 7th and the 8th year of the herd planning in Annex II. The numbers within the section 'difference' of Table 13.14 are the numbers for cows that could not make it from the 7th to the 8th year. In other words, the number of culled cows in the 7th year is 40 in this herd.

Table 13.14 Calculation for the number of culled cows

Year	Period	COWS							TOTAL
		1. Lactation	2. Lactation	3. Lactation	4. Lactation	5. Lactation	6. Lactation	7. Lactation	
7	1	10	9	6	4	3		3	140
	2	10	9	6	4	3		3	
	3	10	9	6	4	3		3	
	4	10	9	6	4	3		3	
8	1	10	8	7	5	3	2		140
	2	10	8	7	5	3	2		
	3	10	8	7	5	3	2		
	4	10	8	7	5	3	2		
DIFFERENCE		(7.1-8.2)* (10-8)	7.2-8.3 (9-7)	7.3-8.4 (6-5)	7.4-8.5 (4-3)	7.5-8.6 (3-2)	7.6-8.7 (0-0)	7.7	
	1	2	2	1	1	1	0	3	40 Culled cows
	2	2	2	1	1	1	0	3	
	3	2	2	1	1	1	0	3	
	4	2	2	1	1	1	0	3	

*) 7.1-8.2: They stand for the difference between the 1st lactation of the 7th year and the 2nd lactation of the 8th year.

The number of culled cows is equal to multiplication of the number of cows in herds where the number of cows is steady by the culling rate. When it comes to the first years of the herd planning, it is better to calculate the number of culled cows as aforementioned.

Not all of the culled cows are sold. A part of cows is either dead or worthless. The income generated from the culled cows that is why must be calculated predicating it on approximately 85-90 % of the number attained as aforementioned. If it is predicated on 85 %, then the number of culled cows to be a basis to the income for the 7th year, in this instance, must be 40*0.85=34, not 40.

13.5.3 Number of Surplus Pregnant Heifers

An enterprise may sell breeding pregnant heifers when the projected capacity is attained. Table 13.15 displays how to calculate the number of pregnant heifers to be sold by predicating it on the 7th, the 8th and the 9th year of the herd planning in Annex II. The number of surplus pregnant heifers is as many as the difference between the number of produced pregnant heifers and the number for those to join the herd. In the Table, the number of cows for the first quarter of the 7th year in the 2nd or subsequent (2-7) lactation orders is 25 as the projected capacity for the first quarter is 35. In order to reach this number, 10 (35-25=10) pregnant heifers must proceed to the first lactation. The number for heifers to proceed to the first lactation in this quarter is 12. The number for heifers to be sold for this quarter, therefore, is 12-10= 2 as the number for heifers to be sold within that year (the 7th year) is 2*4= 8. The number for this instance is 12 in the 8th and 20 in the 9th year.

Table 13.15 The calculation of the number for heifers to be sold

Year	Period	PREGNANT HEIFER			COWS									
		Produced	To be sold	To Join the Herd	1. Lactation	2. Lactation	3. Lactation	4. Lactation	5. Lactation	6. Lactation	7. Lactation	2-7 Total number of t in all lactation number	Capacity	Total
7	1	12	2	10	10	9	6	4	3		3	25	35	140
	2	12	2	10	10	9	6	4	3		3	25	35	
	3	12	2	10	10	9	6	4	3		3	25	35	
	4	12	2	10	10	9	6	4	3		3	25	35	
8	1	13	3	10	10	8	7	5	3	2		25	35	140
	2	13	3	10	10	8	7	5	3	2		25	35	
	3	13	3	10	10	8	7	5	3	2		25	35	
	4	13	3	10	10	8	7	5	3	2		25	35	
9	1	14	5	9	9	9	6	5	3	2	1	26	35	140
	2	14	5	9	9	9	6	5	3	2	1	26	35	
	3	14	5	9	9	9	6	5	3	2	1	26	35	
	4	14	5	9	9	9	6	5	3	2	1	26	35	

13.5.4 The Income Generated from Male Animals

The number of male animals sold by the enterprise in that period is the number of 'males to be sold'. When it comes to the calculation of the income, it would be enough to multiply this number by the unit price of sold male animals. In the instance of Annex II, the males are sold when they are 16-18 months old. When complying with this condition, the number of bulls to be sold in the 4th and the 5th year is 42 (9+11+11+11) and 50 (11+13+13+13) respectively.

13.5.5 Non-Breeding Heifer Income

Some of the heifers cannot be pregnant others may have some defects to prevent them from breeding. Defined as non-breeding heifers, these animals are sold for slaughter. The number of non-breeding heifers can be calculated multiplying the number of heifers in 16-18 month-old age group by the number for (1- pregnancy rate in heifers). In this case, the number attained would be equal to the difference between the number of heifers in 16-18 month-old age group that is the one prior to the consecutive quarters and the number of heifers in 19-21 month-old age group of the subsequent one. Table 13.16 displays how to calculate the number of non-breeding heifers in the 8th year of the herd planning specified in Annex II.

As seen in the Table, 14 out of 15 heifers in 16-18 month-old age group for the first quarter of the 8th year have transferred to 19-21 month-old age group in the 2nd quarter of the 8th year as the remaining 1 heifer has been culled from breeding. In the same way, 14 out of 16 heifers in 16-18 month-old age group for the 4th quarter of the 8th year have moved into the first quarter of the 9th year as 2 heifers have been culled from breeding. The number of non-breeding heifers in the 8th year is 7 in total.

Table 13.16 The calculation for the number of non-breeding pregnant heifers

Year	Period	YOUNG FEMALES 16-24 MONTHS AGE GROUP			Non-Breeding Heifer	
		16-18 months	19-21 months	22-24 months	Period	Annual
8	1	15	14	14	15-14=1	7
	2	16	14	14	16-14=2	
	3	16	14	14	16-14=2	
	4	16	14	14	16-14=2	
9	1	16	14	14		

13.5.6 A Variation in the Value of Livestock

The value of a herd in any period can be calculated if the unit price of animals in each age group and sex is known. The difference in values of herds calculated in the beginning of each year is defined as 'the variation in the value of livestock". If the earlier quarter has less value, then the value of the herd increases. If not, it means that the value of the herd decreases. The calculation of the value of the herd for all quarters of the 2nd and 3rd year of herd planning in Annex II will make it easier to account for the variation in the value of livestock. Drawn up to that end, the Table 13.17 displays the calculation for the value of the herd in all quarters as the value of young animals in that column is calculated at first and then the total value of cows in each lactation order is added.

In this instance, the value of cows is 336.000 TRY in the second year as it is 404.000 TRY in the third year. When all of this are taken into consideration, the value of the herd which is calculated to be 583.300 TRY in the first quarter of the 2nd year has now become 796.150 TRY in the first quarter of the 3rd year and 797.250 TRY in the last year. Making use of such information helps to calculate the difference in value of livestock from the 2nd to the 3rd year as 796150 TRY - 583300 TRY=212 850 TRY.

Table 13.17 The calculation for the variation in the value of livestock

YEAR	PERIOD	COWS				YOUNG FEMALES								YOUNG MALES						Monetary Value
						0-12 MONTHS AGE GROUP				13-24 MONTHS AGE GROUP				0-18 MONTHS AGE GROUP						
		1. Lactation	2. Lactation	3. Lactation	TOTAL	0-3 months	4-6 months	7-9 months	10-12 months	13-15 months	16-18 months	19-21 months	22-24 months	0-3 months	4-6 months	7-9 months	10-12 months	13-15 months	16-18 months	
Price, TRY		4500	4000	3500		1500	1750	2250	2750	3100	3600	4000	4750	1350	1500	2000	2600	3000	3500	
2	1		21		84	11	12	12	11	11				11	12	12	11	11		583300
	2		21			11	10	12	11	11	11			11	10	12	11	11	11	654900
	3		21			11	10	10	11	11	11	10		11	10	10	11	11	11	686400
	4		21			11	10	10	10	11	11	10	10	11	10	10	10	11	11	728550
3	1	10		16	104	13	10	10	10	10	11	10	10	13	10	10	10	10	11	796150
	2	10		16		13	12	10	10	10	10	10	10	13	12	10	10	10	10	795550
	3	10		16		13	12	12	10	10	10	8	10	13	12	12	10	10	10	796050
	4	10		16		13	12	12	12	10	10	8	8	13	12	12	12	10	10	797250

13.6 Exceptions

The elaboration on how to prepare a herd planning has led to making some assumptions. The most significant ones are the first calving age and calving interval. The values for these characteristics in many herds may differ from the ones adopted in instances.

Increase in the First Calving Age: The first calving age is regarded 24 months up until now. The first births, however, might come along for instance in the 27th or the 30th month. In this case, two columns subsequent to '21-24 months' are added to the segment of young females in Table 13.10 or Table 13.11 and then they are titled with "25-27 months" and '28-30 months'. If the calving takes place in the 25th-27th months, then the last column will be void. When the calving are assumed to take place in 28th-30th months, then the 2nd, the 3rd and the 4th year for the herd composed of 100 pregnant heifers given birth by 25 heifers in each quarter of the year would be as it is in Table 13.18.

Table 13.18 the 2nd, the 3rd and the 4th year for the herd composed of 100 pregnant heifers given birth by 25 heifers in each quarter of the year when the age at first birth is 30 months.

Year	Period	PREGNANT HEIFER		COWS					YOUNG FEMALES										YOUNG MALES					
		Produced	Joining the Herd	1. Lactation	2. Lactation	3. Lactation	4. Lactation	TOTAL	0-3 months	4-6 months	7-9 months	10-12 months	13-15 months	16-18 months	19-21 months	22-24 months	25-27 months	28-30 months	0-3 months	4-6 months	7-9 months	10-12 months	13-15 months	16-18 months
Transition and Survival Rate				1.00	0.85	0.75	0.75		0.95	0.97	0.98	0.99	0.99	0.99	0.99	0.99	0.99	0.99	0.95	0.97	0.98	0.99	0.99	0.99
2	1				21			84	11	12	12	11	11	0					11	12	12	11	11	
	2				21				11	10	12	11	11	11					11	10	12	11	11	11
	3				21				11	10	10	11	11	11	10				11	10	10	11	11	11
	4				21				11	10	10	10	11	11	10	10			11	10	10	10	11	11
3						16		84	8	10	10	10	9	11	10	10	10		8	10	10	10	9	11
						16			8	8	10	10	9	9	10	10	10	10	8	8	10	10	9	9
		10	10	10		16			13	8	7	10	9	9	8	10	10	10	13	8	7	10	9	9
		10	10	10		16			13	12	7	7	9	9	8	8	10	10	13	12	7	7	9	9
4	1	10	10	10			12	100	11	12	12	7	7	9	8	8	8	10	11	12	12	7	7	9
	2	10	10	10			12		11	10	12	12	7	7	8	8	8	8	11	10	12	12	7	7
	3	8	8	8	8		12		14	10	10	12	11	7	6	8	8	8	14	10	10	12	11	7
	4	8	8	8	8		12		14	14	10	10	11	11	6	6	8	8	14	14	10	10	11	11

Extension of Calving Interval: Paying regard to calving interval leads to confusion. Not paying regard at least results in projecting a higher number of calves. Transition rates projected to eliminate such defects may be varied. Alternatively, the transition rates may be kept steady but some adjustments may come into effect to make up for the extension of calving interval, for the number of calves produced. For instance, if calving interval is 14 months instead of 12, then the number of calves would not be as many as the number of cows making it to the next lactation, calculated from "cow number*12/14" equation.

Purchase of Pregnant Heifers or Animals: If an enterprise, in any period, purchase pregnant heifers or some animals at various ages, then all of this must be added to the period of time corresponding in the herd planning. For instance, if 12 heifers at the age of 13-15 months are bought in the 3rd quarter of the 2nd year, then it would be enough to add 12 and henceforth to take this number into consideration in the forthcoming periods as well. In the same way when pregnant heifers to give a birth in the last quarter of the 3rd year are bought, this must be added to the same period as cows in the 1st lactation. The procedure for calves to be given birth by these animals is the same with other calves born in the herd.

ANNEX I

The number of cows, pregnant heifers and 0-24 month-old young cattle in the first 10 years for an enterprise commencing with 100 pregnant heifers the one fourth of which give a birth in each quarter of the year and aiming to develop

Year	Period	PREGNANT HEIFER		COWS								YOUNG FEMALES								YOUNG MALES					
		Produced	Joining the Herd	1. Lactation	2. Lactation	3. Lactation	4. Lactation	5. Lactation	6. Lactation	7. Lactation	TOTAL	0-3 months	4-6 months	7-9 months	10-12 months	13-15 months	16-18 months	19-21 months	22-24 months	25-27 months	28-30 months	0-3 months	4-6 months	7-9 months	10-12 months
Survival and Transition Rate				1.00	0.85	0.75	0.75	0.70	0.65	0.55		0.95	0.97	0.98	0.99	0.95	0.97	0.98	0.99	0.95	0.97	0.98	0.99	0.95	0.97
1	1			25							100	13								13					
	2			25								13	12							13	12				
	3			25								13	12	12						13	12	12			
	4			25								13	12	12	11					13	12	12	11		
2	1				21						84	11	12	12	11	11				11	12	12	11	11	
	2				21							11	10	12	11	11	11			11	10	12	11	11	11
	3				21							11	10	10	11	11	11	10		11	10	10	11	11	11
	4				21							11	10	10	10	11	11	10	10	11	10	10	10	11	11
3	1	10	10	10		16					104	13	10	10	10	9	11	10	10	13	10	10	10	9	11
	2	10	10	10		16						13	12	10	10	9	9	10	10	13	12	10	10	9	9
	3	10	10	10		16						13	12	12	10	9	9	8	10	13	12	12	10	9	9
	4	10	10	10		16						13	12	12	12	9	9	8	8	13	12	12	12	9	9

Year	Period	PREGNANT HEIFER		COWS								YOUNG FEMALES								YOUNG MALES					
		Produced	Joining the Herd	1. Lactation	2. Lactation	3. Lactation	4. Lactation	5. Lactation	6. Lactation	7. Lactation	TOTAL	0-3 months	4-6 months	7-9 months	10-12 months	13-15 months	16-18 months	19-21 months	22-24 months	25-27 months	28-30 months	0-3 months	4-6 months	7-9 months	10-12 months
Survival and Transition Rate				1.00	0.85	0.75	0.75	0.70	0.65	0.55		0.95	0.97	0.98	0.99	0.95	0.97	0.98	0.99	0.95	0.97	0.98	0.99	0.95	0.97
4	1	8	8	8	8		12				112	14	12	12	12	11	9	8	8	14	12	12	12	11	9
	2	8	8	8	8		12					14	13	12	12	11	11	8	8	14	13	12	12	11	11
	3	8	8	8	8		12					14	13	13	12	11	11	10	8	14	13	13	12	11	11
	4	8	8	8	8		12					14	13	13	13	11	11	10	10	14	13	13	13	11	11
5	1	10	10	10	7	6		8			124	16	13	13	13	13	11	10	10	16	13	13	13	13	11
	2	10	10	10	7	6		8				16	15	13	13	13	13	10	10	16	15	13	13	13	13
	3	10	10	10	7	6		8				16	15	14	13	13	13	11	10	16	15	14	13	13	13
	4	10	10	10	7	6		8				16	15	14	14	13	13	11	11	16	15	14	14	13	13
6	1	11	11	11	8	5	5		5		136	17	15	14	14	14	13	11	11	17	15	14	14	14	13
	2	11	11	11	8	5	5		5			17	16	14	14	14	14	11	11	17	16	14	14	14	14
	3	11	11	11	8	5	5		5			17	16	16	14	14	14	12	11	17	16	16	14	14	14
	4	11	11	11	8	5	5		5			17	16	16	16	14	14	12	12	17	16	16	16	14	14
7	1	12	12	12	9	6	4	3		3	148	20	16	16	16	15	14	12	12	20	16	16	16	15	14
	2	12	12	12	9	6	4	3		3		20	19	16	16	15	15	12	12	20	19	16	16	15	15
	3	12	12	12	9	6	4	3		3		20	19	18	16	15	15	14	12	20	19	18	16	15	15
	4	12	12	12	9	6	4	3		3		20	19	18	18	15	15	14	14	20	19	18	18	15	15
8	1	13	13	13	10	7	5	3	2		160	20	19	18	18	18	15	14	14	20	19	18	18	18	15
	2	13	13	13	10	7	5	3	2			20	19	18	18	18	17	14	14	20	19	18	18	18	17
	3	13	13	13	10	7	5	3	2			20	19	19	18	18	17	16	14	20	19	19	18	18	17
	4	13	13	13	10	7	5	3	2			20	19	19	18	18	17	16	15	20	19	19	18	18	17
9	1	15	15	15	11	8	5	3	2	1	180	23	19	19	18	18	17	16	15	23	19	19	18	18	17
	2	15	15	15	11	8	5	3	2	1		23	22	19	18	18	18	16	15	23	22	19	18	18	18
	3	15	15	15	11	8	5	3	2	1		23	22	21	18	18	18	16	15	23	22	21	18	18	18
	4	15	15	15	11	8	5	3	2	1		23	22	21	21	18	18	16	16	23	22	21	21	18	18
10	1	16	16	16	13	9	6	4	2	1	204	25	22	21	21	21	18	16	16	25	22	21	21	21	18
	2	16	16	16	13	9	6	4	2	1		25	24	21	21	21	21	16	16	25	24	21	21	21	21
	3	16	16	16	13	9	6	4	2	1		25	24	23	21	21	21	18	16	25	24	23	21	21	21
	4	16	16	16	13	9	6	4	2	1		25	24	23	23	21	21	18	18	25	24	23	23	21	21

ANNEX II

The herd planning in the first 10 years for an enterprise commencing with 100 pregnant heifers the one fourth of which give a birth in each quarter of the year and having a capacity of cows

Year	Period	PREGNANT HEIFER		COWS								YOUNG FEMALES								YOUNG MALES					
		Produced	Joining the Herd	1. Lactation	2. Lactation	3. Lactation	4. Lactation	5. Lactation	6. Lactation	7. Lactation	TOTAL	0-3 months	4-6 months	7-9 months	10-12 months	13-15 months	16-18 months	19-21 months	22-24 months	25-27 months	28-30 months	0-3 months	4-6 months	7-9 months	10-12 months
Survival and Transition Rate				1.00	0.85	0.75	0.75	0.70	0.65	0.55		0.95	0.97	0.98	0.99	0.95	0.97	0.98	0.99	0.95	0.97	0.98	0.99	0.95	0.97
1	1			25							100	13								13					
	2			25								13	12							13	12				
	3			25								13	12	12						13	12	12			
	4			25								13	12	12	11					13	12	12	11		
2	1				21						84	11	12	12	11	11				11	12	12	11	11	
	2				21							11	10	12	11	11	11			11	10	12	11	11	11
	3				21							11	10	10	11	11	11	10		11	10	10	11	11	11
	4				21							11	10	10	10	11	11	10	10	11	10	10	10	11	11
3	1	10	10	10		16					104	13	10	10	10	9	11	10	10	13	10	10	10	9	11
	2	10	10	10		16						13	12	10	10	9	9	10	10	13	12	10	10	9	9
	3	10	10	10		16						13	12	12	10	9	9	8	10	13	12	12	10	9	9
	4	10	10	10		16						13	12	12	12	9	9	8	8	13	12	12	12	9	9
4	1	8	8	8	8		12				112	14	12	12	12	11	9	8	8	14	12	12	12	11	9
	2	8	8	8	8		12					14	13	12	12	11	11	8	8	14	13	12	12	11	11
	3	8	8	8	8		12					14	13	13	12	11	11	10	8	14	13	13	12	11	11
	4	8	8	8	8		12					14	13	13	13	11	11	10	10	14	13	13	13	11	11
5	1	10	10	10	7	6		8			124	16	13	13	13	13	11	10	10	16	13	13	13	13	11
	2	10	10	10	7	6		8				16	15	13	13	13	13	10	10	16	15	13	13	13	13
	3	10	10	10	7	6		8				16	15	14	13	13	13	11	10	16	15	14	13	13	13
	4	10	10	10	7	6		8				16	15	14	14	13	13	11	11	16	15	14	14	13	13
6	1	11	11	11	8	5	5		5		136	17	15	14	14	14	13	11	11	17	15	14	14	14	13
	2	11	11	11	8	5	5		5			17	16	14	14	14	14	11	11	17	16	14	14	14	14
	3	11	11	11	8	5	5		5			17	16	16	14	14	14	12	11	17	16	16	14	14	14
	4	11	11	11	8	5	5		5			17	16	16	16	14	14	12	12	17	16	16	16	14	14
7	1	12	10	10	9	6	4	3		3	140	18	16	16	16	15	14	12	12	18	16	16	16	15	14
	2	12	10	10	9	6	4	3		3		18	17	16	16	15	15	12	12	18	17	16	16	15	15
	3	12	10	10	9	6	4	3		3		18	17	17	16	15	15	14	12	18	17	17	16	15	15
	4	12	10	10	9	6	4	3		3		18	17	17	16	15	15	14	14	18	17	17	16	15	15

Year	Period	PREGNANT HEIFER		COWS								YOUNG FEMALES								YOUNG MALES					
		Produced	Joining the Herd	1. Lactation	2. Lactation	3. Lactation	4. Lactation	5. Lactation	6. Lactation	7. Lactation	TOTAL	0-3 months	4-6 months	7-9 months	10-12 months	13-15 months	16-18 months	19-21 months	22-24 months	25-27 months	28-30 months	0-3 months	4-6 months	7-9 months	10-12 months
Survival and Transition Rate				1.00	0.85	0.75	0.75	0.70	0.65	0.55		0.95	0.97	0.98	0.99	0.95	0.97	0.98	0.99	0.95	0.97	0.98	0.99	0.95	0.97
8	1	13	10	10	8	7	5	3	2		140	18	17	17	16	16	15	14	14	18	17	17	16	16	15
	2	13	10	10	8	7	5	3	2			18	17	17	16	16	16	14	14	18	17	17	16	16	16
	3	13	10	10	8	7	5	3	2			18	17	16	16	16	16	14	14	18	17	16	16	16	16
	4	13	10	10	8	7	5	3	2			18	17	16	16	16	16	14	14	18	17	16	16	16	16
9	1	14	9	9	9	6	5	3	2	1	140	18	17	16	16	16	16	14	14	18	17	16	16	16	16
	2	14	9	9	9	6	5	3	2	1		18	17	16	16	16	15	14	14	18	17	16	16	16	15
	3	14	9	9	9	6	5	3	2	1		18	17	16	16	16	15	14	14	18	17	16	16	16	15
	4	14	9	9	9	6	5	3	2	1		18	17	16	16	16	15	14	14	18	17	16	16	16	15
10	1	14	10	10	7	7	4	4	2	1	140	18	17	16	16	16	15	14	14	18	17	16	16	16	15
	2	14	10	10	7	7	4	4	2	1		18	17	16	16	16	16	14	14	18	17	16	16	16	16
	3	14	10	10	7	7	4	4	2	1		18	17	16	16	16	16	14	14	18	17	16	16	16	16
	4	14	10	10	7	7	4	4	2	1		18	17	16	16	16	16	14	14	18	17	16	16	16	16
Total Last Year				140 (%38)								127 (%35)								99 (%27)					

14. CHAPTER Herd Planning and Calculation of Annual Requirements

Prof. Dr. Can UZMAY

14.1 Introduction

This chapter presents an approach supported by quantitative examples regarding the construction of a herd flow plan for a dairy cattle farming enterprise, preparation of an annual feed plan and calculation of estimated milk and livestock sale revenues based on this plan. However, it may not be possible for the planner to exactly apply the methods described in this chapter to any enterprise. In planning studies involving a dairy cattle farming enterprise, specific conditions of each enterprise are required to be adapted to the methods described below. As a matter of fact, many differences exist between enterprises, including the size of the mature dairy herd, distribution of births by months, culling rates (herd leaving rates), sale strategies for breeding cattle and cattle for slaughter, types of forages and concentrate feeds used in the ration, quality of feed stuff of the same type and many other matters that may influence the planning, all of which may also differ in the same enterprise in different years. On the other hand, the planner may carry out the classification of the livestock by age, gender and physiological status in a more precise way than that dealt within this book and form much more groups.

14.2 Preparation of the Herd Flow Plan

Herd flow plan for a dairy farming enterprise presents the average number of animals with various ages, genders and physiological status in the relevant year. First of all, terms for cattle at different ages and physiological periods should be known in order to prepare a herd flow plan. According to their ages and physiological status, cattle are generally called as follows:

Calf: 0-6-month of age male and female offspring of cattle (calf in liquid feed consumption period when 0-2-month old, weaned older calf between 3 and 6 month of age).

Heifer and bull calf: Male and female young cattle between 6 and 12-month of age.

Heifer: Adult young female cattle from 12 month of age to her first calving (Non-pregnant heifer for the period between 12-month of age and getting pregnant and pregnant heifer for the period between pregnancy and first calving).

Young fattening bull: Young male cattle over 12-month old.

Cow: Mature female cattle after her first calving (dairy or milking cow in the milk production period and dry cow in the dry period)

Bull: Mature male cattle used for breeding.

Livestock with different ages, genders and physiological status are kept in different barns or housing areas and fed with different rations because of their different nutritional requirements.

Preparation of herd flow plan for a cattle dairy farm is important as it forms a basis for proper planning with respect to the matters listed below:

- Calculating the annual need for forages and concentrate feeds ,
- Making the planting plan and determining how much land will be allocated for forage and concentrate feed production if they are produced in the enterprise's land,
- Calculating the capacity of forage and concentrate feed storing facilities (grain, oilseed meal, silage, hay and straw storage facilities),
- Determining the housing capacity (number of individual calf stalls in the liquid feed consumption period, housing capacities for weaned calves, adult heifer and bull calves, young heifers, non-pregnant and pregnant heifers, milking and dry cows and fattening bulls if fattening is done in the farm),
- Collecting the data required for preparing the annual estimated budget of the enterprise. In this scope;
    - Estimation of annual milk production and thus milk sale revenues
    - Estimation of the number of livestock to be sold as breeding, fattening or slaughter animals, and so the livestock sale revenues
    - Estimation of annual feed costs

While preparing a herd flow plan, some biological parameters should be known regarding the life and accordingly production and reproduction stages of dairy cattle. These parameters and appropriate values are given in Table 14.1.

Table 14.1 Biological parameters for herd flow plan

Weaning age	2 months
Separation of male and female calves	6 months
Sexual maturity age	7-11months
Age of first breeding	15 months
Age of first calving	24 months
Lactation period	10 months (305 days)
Dry period	2 months (60 days)
Calving interval	12 months (365 days)
Gender ratio at births	% 50 female, % 50 male

Furthermore, a herd flow plan entails some assumptions. One of the first assumptions to be made is the distribution of births by months. It is generally accepted that in a steady herd births occur evenly among months in a year.

While preparing the herd flow plan, the herd is grouped as specified below according to the age, gender and physiological status of cattle, and the numbers of animals in each group are calculated.

- Mature dairy herd: Number of milking and dry cows in the entire herd
- Number of 0-2-month old male and female calves
- Number of 3-6-month old weaned male and female calves
- Number of 6-12-month old young heifer calves
- Number of 13-15-month old non-pregnant heifers
- Number of 16-18-month old heifers in insemination period
- Number of 19-24-month old pregnant heifers
- Number of 6-12-month old bull calves
- Number of 13-18-month old fattening bulls

On the other hand, culling (herd leaving) rates for various age periods are used. Considering that herd leaving rates from birth to various age periods differ between enterprises and years, the average values in Table 14.2 may be used. Values in the Table are herd-culling rates generally due to death. They are based on the assumption that no sales occur for breeding or slaughter until the age of 18 months in males and 24 months in females.

Table 14.2 Herd leaving and survival rates from birth to different age periods

Age period	Herd leaving rates	Survival rates
0-2-month old (calf)	8 %	92 %
3-6-month old (calf)	15 %	85 %
7-12-month old (young heifer and bull calf)	18 %	82 %
13-15-month old (non-pregnant heifer)	20 %	80 %
16-18-month old (inseminated heifer)	21 %	79 %
19-24-month old (pregnant heifer)	22 %	78 %
13-18-month old (fattening bull)	20 %	80 %

Preparation of a herd flow plan where the births occur evenly among months in a year is demonstrated with the following steps:

Step 1: Calculation of the number of milking and dry cows from the total mature dairy herd stock

Basic variable in the preparation of the herd flow plan is the mature dairy herd (MDH) stock. In other words, mature dairy herd stock is the starting point for the preparation of the herd flow plan. Mature dairy herd stock is the number of animals that have calved and thus begun lactation in the recent year. Mature dairy herd stock consists of the milking and dry cows. Considering that cows are milked for 10 months and dried off for 2 months in a year, approximately 83.3% (10/12) of the mature dairy herd can be said to be in lactation period, and so in the milking herd, and 16.7% (2/12) can be said to be in dry period in any time of the year. In the light of such information, starting from the mature dairy herd (MDH), the number of milking cows (NMC) and dry cows (NDC) are computed as follows:

$NMC = MDH \times 83.3/100$

$NDC = MDH \times 16.7/100$

Using the number of milking cows, mature dairy herd stock can be computed as follows:

$MDH = NMC / 0.833$

Step 2: Calculation of the number of 1-2-month old calves

The number of calves that are 1-2-month old ($NClf_{1-2}$) can be computed using the mature dairy herd stock (MDH) and a total still birth and mortality rate in calves until this age period, which is 8% (thus the survival rate of 92%):

$NClf_{1-2} = MDH \times 0.92 \times (2/12)$

Step 3: Calculation of the number of 3-6-month old calves

The number of calves that are 3-6-month old ($NClf_{3-6}$) can be computed using the mature dairy herd stock (MDH) and total herd leaving rate in calves until this age period, which is 15% (thus the survival rate of 85%):

$NClf_{3-6} = MDH \times 0.85 \times (4/12)$

Step 4: Calculation of the number of 7-12-month old heifer and bull calves

The number of young heifer or bull calves that are 7-12-month old ($NClf_{7-12}$) can be computed using the mature dairy herd stock (MDH) and a total herd leaving rate in the adult calves until this age period, which is 18%, (thus the survival rate of 82%), as well as the gender ratio of 50%:

$NClf_{7-12} = MDH \times 0.82 \times 0.50 \times (6/12)$

Step 5: Calculation of the number of 13-15-month old non-pregnant heifers

The number of non-pregnant heifers that are 13-15-month old ($NNPH_{13-15}$) can be computed using the mature dairy herd stock (MDH) and the herd leaving rate until this age period, which is 20%, (thus the survival rate of 80%), as well as the gender ratio of 50%:

$NNPH_{13\text{-}15}$= MDH x 0.80 x 0.50 x (3/12)

Step 6: Calculation of the number of 16-18-month old inseminated heifers

The number of inseminated heifers that are 16-18-month old ($NIH_{16\text{-}18}$) can be computed using the mature dairy herd stock (MDH) and total herd leaving rate until this age period, which is 21%, (thus the survival rate of 79%), as well as the gender ratio of 50%:

$NIH_{16\text{-}18}$= MDH x 0.79 x 0.50 x (3/12)

Step 7: Calculation of the number of 19-24-month old pregnant heifers

The number of pregnant heifers that are 19-24-month old ($NPH_{19\text{-}24}$) can be computed using the mature dairy herd stock (MDH) and total herd leaving rate until this age period, which is 22%, (thus the survival rate of 78%), as well as the pregnancy rate of 90% and gender ratio of 50%:

$NPH_{19\text{-}24}$= MDH x 0.78 x 0.50 x 0.90 x (6/12)

Step 8: Calculation of the number of 13-18-month old fattening bulls

In the case that male livestock are fattened in the farm, the number of fattening bulls that are 13-18-month old ($NFB_{13\text{-}18}$) can be computed using the mature dairy herd stock (MDH) and total herd leaving rate until this age period, which is 20%, (thus the survival rate of 80%), as well as the gender ratio of 50%:

$NFB_{13\text{-}18}$= MDH x 0.80 x 0.50 x (6/12)

Table 14.3 shows the calculation of the number of different cattle groups, according to their age, gender and physiological status, for a herd that consists of a total mature dairy herd of 96 cows. According to the calculations, the total size of the herd that contains 96 mature cows including the 0-24-month old young animals is 233. Therefore, the proportion of the mature dairy herd stock to the total herd stock is 41%. This rate is generally an expected value for dairy cattle populations, which is also obtained in evaluations aiming to investigate the structure of dairy cattle populations.

14.3 Barn Planning

As seen in Table 14.3, in a herd containing 96 mature dairy cows, the approximate number of milking cows is computed to be 80, dry cows 16, 1-2-month old calves that are in liquid feed period 15, 3-6-month old weaned calves 27, 7-12-month old heifer or bull calves 20 each, 13-15-month old non-pregnant heifers 10, 16-18-month old inseminated heifers 9, 19-24-month old pregnant heifers 17, and 13-18-month old young fattening bulls 19 for enterprises that fattens the farm born male calves by them self. These values constitute the basis for planning the barn capacity in the enterprise. On the other hand, these values are based on the assumption that births occur evenly among months in a year. In practice, however, more births may involuntarily occur in some months. Therefore, it may

be recommended that such values may be increased by 10-15% while planning the housing capacity. For example, it would be more appropriate to plan the barn for milking cows with a capacity of 90 head instead of 80 and the number of individual stalls for calves at liquid feeding period as 18 instead of 15.

Another important consideration in barn planning is the determination of the number of maternity pens. Calving is one of the stages in which cows are quite sensitive. It is essential in terms of successful herd management that cows in the late pregnancy period are put in a maternity pen that is sufficiently spacious (20-25 m^2), clean, dry, bright and well ventilated at least 10 days prior to the calving, and that they give birth in these pens. This practice ensures many complications that may occur during and after calving to be minimized. Number of maternity pens may be computed simply by taking 20-25% of the number of dry cows (NDC).

Table 14.3 Calculation of the number of animals in different groups according to age, gender and physiological status in a herd containing 96 mature dairy cows

Livestock group	Abbreviation	Calculation formula*	Calculation	Number
Mature dairy herd	MDH			96
Milking cows	NMC	MDH x 0.833	96 x 0.833	80
Dry cows	NDC	MDH – NMC	96 – 80	16
Calves (1-2-month old)	$NClf_{1-2}$	MDH x SR_{1-2} x (2/12)	96 x 0.92 x (2/12)	15
Calves (3-6-month old)	$NClf_{3-6}$	MDH x SR_{3-6} x (4/12)	96 x 0.85 x (4/12)	27
Young heifers (7-12-month old)	$NClf_{7-12}$	MDH x SR_{7-12} x GR x (6/12)	96 x 0.82 x 0.50 x (6/12)	20
Non-pregnant heifers (13-15-month old)	$NNPH_{13-15}$	MDH x SR_{13-15} x GR x (3/12)	96 x 0.80 x 0.50 x (3/12)	10
Inseminated heifers (16-18-month old)	NIH_{16-18}	MDH x SR_{16-18} x GR x (3/12)	96 x 0.79 x 0.50 x (3/12)	9
Pregnant heifers (19-24-month old)	NPH_{19-24}	MDH x SR_{19-24} x GR x PR x (6/12)	96 x 0.78 x 0.50 x 0.90 x (6/12)	17
Young bull calves (7-12-month old)	$NClf_{7-12}$	MDH x SR_{7-12} x GR x (6/12)	96 x 0.82 x 0.50 x (6/12)	20
Fattening bulls (13-18 ay)	NFB_{13-18}	MDH x SR_{13-18} x GR x (6/12)	96 x 0.80 x 0.50 x (6/12)	19
Total				**233**

Abbreviations: **SR** = Survival rate; **GR** = Gender ratio at birth; **PR** = Pregnancy rate

* Fractional values that are the last term of the formulas such as (2/12) represent the proportion of the length of the relevant age period to a year in terms of months.

14.4 Annual Feed Planning

Annual feed planning may be easily set up after designing the herd flow plan for a dairy cattle farm. The first step in preparing the feed plan is to coarsely determine the rations for livestock groups in different ages, genders and physiological status, whose quantities have been found in the herd flow plan. While determining the rations, forages and concentrate feeds are taken into consideration, which are commonly produced within the farm or in its close vicinity and thus, can be used by the farm within economic limits. Rations with approximate composition are formed for each group, considering the nutrient requirements of the relevant animal groups and average nutritional value of the feeds planned to be used.

First part of Table 14.4 shows general rations formed separately for different animal groups as dealt within this book. While formulating the rations, commonly used forages in the Aegean Region such as corn silage, alfalfa or pasture grass hay, straw and a concentrate mix consisting of grains such as corn, barley and wheat and oilseed meals (cotton and sunflower) was taken into account. Yet, it is to consider that the composition of the rations may considerably vary depending on the quality of forages and concentrates used and particularly on energy and protein content of unit dry matter. The second part of Table 14.4 contains the numbers of livestock in each group found in as a result of arranging the herd flow plan, as well as daily total amounts of consumption of each feed material calculated for each group, using the composition of daily rations. As demonstrated in Table 14.5, total daily silage consumption for an enterprise containing a dairy herd of 96 cows is 3469 kg, whereas hay consumption is 688 kg, straw consumption is 258 kg, concentrate feed mixture consumption is 859 kg.

Table 14.6 shows the calculation of annual requirement for feed material, using total daily amounts of consumption, and the calculation of corresponding capacities (volumetric) of feed material storage facilities. The calculations also take into account the losses occurring while storing and feeding particularly corn silage and hay. Level of loss is assumed to be 15% for corn silage, 10% for hay and 5% for straw and concentrate feed mixture. In our illustrative example, the requirements of the enterprise for corn silage, hay, straw and concentrate feed mixture are 1490, 279, 99 and 330 tons/year, respectively.

Table 14.4 Approximate daily rations for different animal groups by age, gender and physiological status and corresponding total daily consumptions of forages and concentrate feeds

Animal group	General ration formulation				Number of animal	Total daily consumption of forages and concentrate feed			
	Silage	Hay	Straw*	Grain+ oilseed meal		Silage	Hay	Straw	Grain+ oilseed meal
Milking cow (ave. 25 kg milk/day)	26	5	1	8	80	2080.0	400.0	80.0	640.0
Dry cow	17	2.5	2.5	1.5	16	272.0	40.0	40.0	24.0
Pregnant heifer (19-24-month old)	16	3	2	1.5	17	272.0	51.0	34.0	25.5
Inseminated heifer	15	2.5	2	1	9	135.0	22.5	18.0	9.0
Non-pregnant heifer (13-15-month old)	13	2.5	2	1	10	130.0	25.0	20.0	10.0
Young heifer (7-12-month old)	10	2	1	1.5	20	200.0	40.0	20.0	30.0
Calf (3-6-month old)	-	3	1	2	27	0.0	81.0	27.0	54.0
Calf (1-2-month old)	-	0.6	0	0.6	15	0.0	9.0	0.0	9.0
Fattening bull (13-18-month old)	20	1	1	3	19	380.0	19.0	19.0	57.0
Bull calf (7-12-month old)	12	1	1	2	20	240.0	20.0	20.0	40.0
Grand total					**233**	**3469.0**	**687.5**	**258.0**	**858.5**

* For calves straw is intended as litter

Table 14.5 Calculation of the annual requirement for forages and concentrate feeds and capacities of storage facilities

Feed	Consumption kg/day	Requirement*		Storage facility capacity, m³**
		kg/day G_{day}	ton/year $G_{year} = G_{day} \times 365 / 1000$	
Corn Silage	3469.0	4081	1489.6	2292
Hay	687.5	764	278.8	1394
Straw	258.0	272	99.1	661
Concentrate feed (Grain+oilseed meal)	858.5	904	329.8	471

* Level of loss is assumed to be 15% for corn silage, 10% for hay and 5% for concentrate feed.

** Unit m³ weight is assumed to be 650 kg for corn silage, 200 kg for hay, 150 kg for straw and 700 kg for concentrate feed.

The unit m^3 weights specified in the footnote under Table 14.5 were used in calculating the annual storage capacity. Moreover, it was assumed that all feed materials are procured once a year in the harvest periods of each feed material. Generally, prices of feed materials are at their lowest level in the post-harvest period and increasingly rise when the products are put into storage. In our illustrative example, the storage capacities calculated are 2300 m^3 (silo facility) for corn silage, 1400 + 700 m^3 (warehouse) for hay and straw, and 500 m^3 (vertical silo and warehouse) for concentrate feed materials. However, if it is the case that feed materials are procured more than once a year, storage facility capacity for the relevant feed will fall.

14.5 Calculation of Annual Estimated Feed Expenses

Annual estimated feed expenses of the enterprise may be easily calculated using the data for annual feed material requirement (Table 14.5) obtained from the annual feed planning and current market prices of feed materials. An illustrative calculation is given in Table 14.6.

Table 14.6 Calculation of total annual estimated feed expense from annual requirement for forage and concentrate feed materials

Feed	Requirement ton/year*	Unit Price TL / ton	Amount TL
Corn Silage	1490	150	223,500
Hay	279	350	97,650
Straw	99	180	17,820
Concentrate feed (Grain+oilseed meal)	330	600	198,000
Milk**	20	750	15,000
Total			**551,970**

* Obtained from Table 14.5

** For feeding calves (88 calves x 225 litres of milk ≅ 20 ton/year)

The illustrative calculation in Table 14.6 presents that total annual estimated feed expense will be TL 552,000 for the illustrative enterprise possessing a dairy herd of 96 cows. Annual feed cost also includes the cost of the milk consumed by calves in their liquid feed period lasting for approximately 2 months. In the calculation, it is assumed that 92% of calves (approximately 88) born from the dairy herd of 96 cows in a year have completed their liquid feed period and that the total milk consumption for each calf is 225 litres.

14.6 Calculation of Annual Estimated Revenue from Milk and Livestock Sales

Annual revenue from milk sales may be easily calculated using the total size of the mature dairy herd, annual average milk yield per cow and milk sale price parameters. Assuming that the annual average milk yield is 7600 l/cow in the enterprise possessing a dairy herd of 96 cows and the average milk sale price is TL 0.75/l, annual estimated revenue from milk sales can be computed as follows:

96 cows x 7600 l/cow/year x 0.75 TL/l milk= TL 547,200/year

Livestock sales from a dairy cattle farm may be classified as follows:

- Surplus breeding cow sales
- Surplus breeding pregnant heifer sales
- Sales of cows for slaughter (non-breeding)
- Sales of heifers for slaughter (non-breeding)
- Sales of young males for breeding (bull calves or young bulls)
- Sales of young males for fattening (1-12-month old bull calves)
- Sales of males for slaughter (fattened bulls)

Calculation of annual estimated revenues from livestock sales is based on a series of assumptions. In our illustrative example containing an enterprise with a mature dairy herd of 96 cows, it is assumed that the culling rate, thus, herd replacement rate, is 25%, and that 20% of cows leaving the herd are sold for breeding, 75% for slaughter, and 5% leave the herd due to death. Other assumptions are that no animal under 18-month old are sold from the herd and no change is planned in the size of the herd through the years.

Annual culling rate (CR) from the mature dairy herd in a dairy cattle farm generally varies between 20% and 40%. Major reasons for leaving the herd are infertility, udder diseases and foot/hoof problems. Such problems preventing cows from proceeding to produce within economic limits result in the animal being sold for slaughter. As the annual culling rate increases in a herd, sales of cows for slaughter increase as well, and sales of breeding surplus heifers decrease. Almost all of the heifers growing in the herd have to be used for replace the herd. This is an undesired case for the profitability of the enterprise. Sale price of cow for slaughter is lower than the sale price of breeding heifer.

Calculation of the annual estimated number of livestock to be sold is demonstrated in Table 14.7. Assuming that the annual culling rate is 25%, the number of breeding cows to be sold is computed to be 5, whereas 18 cows will be sold for slaughter. According to the calculations in Table 14.7, totally 38 heifers reach the age of 18 months in a year, 4 (10%

infertility rate) of which are sold for slaughter due to their infertility, and 34 of which become pregnant. 24 heifers among 34 pregnant heifers are used as replacement in the herd and 10 of them are sold for breeding. The calculation results represent that averagely 38 young fattening bulls reaches slaughterable condition and are sold for slaughter annually.

Table 14.8 shows the calculation of the annual estimated revenues from livestock sales. The numbers of livestock sold were obtained from Table 14.7. In the calculation where the current market prices are taken as the unit sale price, the total annual revenue from livestock sale is computed to be TL 318,400. Annual number of livestock to be sold, thus, revenues from livestock sales may be increased through herd management practices aiming to increase the survival rate and decrease the infertility rate in heifers.

Table 14.7 Calculation of the annual estimated number of livestock to be sold

Livestock group	Abbreviation	Calculation formula	Calculation	Number
Total mature dairy herd	MDH			96
Total number of cows leaving the herd	$Leave_{total\text{-}cow}$	MDH x CR	96 x 0.25	24
Total number of cows leaving the herd due to sale for breeding	$Sale_{brd\text{-}cow}$	$Leave_{total\text{-}cow}$ x 0.20	24 x 0.20	5
Total number of cows leaving the herd due to sale for slaughter	$Sale_{sla\text{-}cow}$	$Leave_{total\text{-}cow}$ x 0.75	24 x 0.75	18
Pregnant heifer (18-month old)	PH_{18}	MDH x SR_{18} x GR x PR	96 x 0.78 x 0.50 x 0.90	34
Number of heifers required for herd replacement	PH_{HR}	MDH x 0.25	96 x 0.25	24
Number of heifers sold for slaughter (18-month old)	$Sale_{sla\text{-}heif}$	MDH x SR_{18} x GR x IR	96 x 0.78 x 0.50 x 0.10	4
Number of heifers sold for breeding (18-month old)	$Sale_{brd\text{-}heif}$	PH_{18} – PH_{HR}	34 - 24	10
Number of fattening bulls sold for slaughter (18-month old)	$Sale_{sla\text{-}bull}$	MDH x SR_{18} x GR	96 x 0.80 x 0.50	38

Abbreviations: **CR** = culling rate, **SR** = Survival rate (up to the relevant age), **GR** = Gender ratio, **IR** = Infertility rate

Table 14.8 Calculation of annual estimated revenues from livestock sales

	Number*	Unit Price TL	Total Revenue TL
Cows sold for breeding	5	5000	25 000
Cows sold for slaughter	18	3500	63 000
Heifers sold for slaughter (18-month old)	4	3300	13 200
Heifers sold for breeding (18-month old)	10	5000	50 000
Fattening bulls sold for slaughter (18-month old)	38	4400	167 200
Total	**75**		**318 400**

* Obtained from Table 14.7

14.7 Conclusion

This chapter deals with the preparation of herd flow plan and calculation of annual feed requirement, annual estimated feed expenses and annual estimated revenues from milk and livestock sales through detailed tables. The said tables constitute a general framework to steer the annual business plans of the consultants of livestock farming enterprises. Parameters in the tables may take different values depending on the enterprise and current conditions. Success of the planning will be escalated to the extent that values for various parameters are determined in an optimum way for the enterprise and current conditions.

15. CHAPTER Agricultural Farm Management and Management of Dairy Cattle Farms

Prof. Dr. İbrahim YILMAZ

15.1 Introduction

Production of agricultural goods has been increasingly changing. It seems quite hard for farmers to hope to gain profits if they disregard the developments in their surroundings. Today, agricultural enterprises are facing an increasingly growing competition. This competition may be not only at national but also at international level. It is not sufficient for farmers to be equipped merely with technical knowledge and know well how to do their business technically, if they want to be successful under such competitive conditions. This technical knowledge should definitely be supported by some economic knowledge. Otherwise, farmers cannot be successful and generate a desired level of income. It is deemed obligatory for farmers to be equipped with agricultural management knowledge if they intend to improve their business, escalate their income and gain more profits. The basic purpose of farmers is to improve their business and attain the highest possible profit. In order to achieve this, first, the current success should be measured and the resources employed to attain this success should be analyzed. In this scope, this chapter basically draws a general framework to present the basic knowledge required to measure and assess the success of dairy cattle farms.

Agricultural management is defined as a selection and decision science indicating how the production factors will be used with respect to the organization and functioning of an agricultural enterprise (Acil & Demirci, 1984). An agricultural enterprise hosts many activities that are quite different from each other. When such activities are grouped, diverse functions and sections of agricultural management become evident. These functions can be listed as management, production, marketing, accounting, financing as well as human resources, public relations and research & development. No doubt, an agricultural enterprise may not be carrying out all of these functions. However, as enterprises grow, these functions are detached from each other and constitute the departments of the enterprise, possessing an ever-increasing significance. It is obvious that farmers will not suffice to effectively fulfill such functions. In this sense, it is of great importance for the organization of farmers and fulfillment of some functions that such organizations provide producers with guidance.

No doubt, management is the most significant one among the enterprise functions. Management may be defined in quite different ways. Such definitions vary depending on the approach of the fields of science (Can, 2001). The definition of management that is agreed on

more or less by scientists is "to transact business via others" (Kocel, 2003). As enterprises grow, transacting business via others becomes more prominent. However, in agricultural enterprises among which family management is widespread, "others" are the farmer himself and family members. Management is the process of executing some activities that are disparate from each other. Such activities, which may also be expressed as managerial activities, may be classified into three groups: planning, implementation (execution) and inspection-control. Nevertheless, some authors deal with managerial activities, in other words, management functions in five groups. Accordingly, management functions are classified as planning, organizing, execution, coordination and inspection/control. These expressions also answer this question: "What do managers do?" Regardless of the level, all managerial activities start with planning.

15.2 Planning

Planning is the first and most important managerial function. Plans are made to achieve goals effectively and efficiently. Planning is a process and this process begins with determining what the goals are and how they can be attained. The plans prepared are like a compass or route for all managers and employees.

In its general and simple meaning, planning is the predetermination of the destination desired to be reached in a given time and how the organization will reach there. By planning, it is agreed on what will be done by whom for which purpose, and where and when it will be done with which resources and costs (Mucuk, 2001). In other words, planning is the process of determining goals and researching, developing and assessing various options to select the ideal one in order to attain these goals (Sariaslan, 1997). The scope of this process may be described as follows.

- All planning activities are for certain aims. Thus, it is essential, above all things, to determine goals in an obvious, clear, available and measurable way in the planning activity.
- Planning entails the researching and development of alternative ways to attain the determined goals.
- In the planning activity, options sought and found or developed should be evaluated. The evaluation is based on the extent the options can achieve the goals and their implementation costs.
- Planning also includes the taking of a decision requiring the selection of the most appropriate one among the possible options.

Typical characteristics of planning activities the scope, which is specified above, may be summarized as follows.

1. Planning is for the future.
2. Predicting the future is essential in planning.
3. Planning covers a period of time.

4. Content of planning varies depending on the decision level.
5. Planning is a process.
6. Teamwork and participation are essential in planning.

The document created in consequence of the planning activity is called plan. Planning of an agricultural enterprise may be carried out in different scopes. Planning may cover the entire enterprise as well as individual branches of activity. Planning may be both for the long-term (strategic planning, investment planning, etc.) and short-term (programs, budgets, etc.).

All planning activities require some information and data regardless of the type of the planning activity. Accuracy and reliability of such information is a precondition for the success of the planning. The primary source of such data will be the very enterprise itself for which planning will be performed. The data should be obtained through the examination and evaluation of the past physical and financial information of the enterprise (Rehber & Tipi, 2005). It is only possible by maintaining accounting records in enterprises.

15.3 Accounting Records

Accounting allows the enterprises to plan the future through the use of experiences and data acquired from past production periods. An effective and successful management is based on proper accounting. Manager checks and evaluates a completed production period by the help of accounting records and plans the future accurately in the light of such data. It is thought that farmers, just like all managers working purposely, are required to include accounting in their management (Aras, 1988). It is deemed inevitable to maintain records so as to analyze and evaluate whether an enterprise operates successfully. Farmer will need accounting records when he wants to know what he put into the business (input), what he obtained in return (output) and which products brought how much revenue (Aras, 1988). Accounting records are needed to determine which measures are required for the improvement and development of the enterprise and reveal the reasons for failure.

Generally, accounting is defined as the technique to record financial transactions and events occurring within an enterprise in consequence of good and service flows, classify them in a certain order, create meaningful summaries from such records, analyze and interpret them (Aras, 1988). Therefore, accounting is not merely record keeping but also covers the ways and methods of analyzing and evaluating such records.

There are various systems developed concerning the keeping of accounting records. Above all things, agricultural accounting should be easy and simple systems that can be applied by farmers in agricultural enterprises, but at the same time an objective one that can provide the desired data and information and is compatible with production theory (Aras, 1988).

Today it seems possible to say that agricultural accounting has not achieved a notable development in Turkey. Majority of our agricultural enterprises do not maintain accounting records. In enterprises keeping records, the purpose is rather to fulfill the tax liabilities. As a

matter of fact, it does not seem possible for the existing producers to maintain and evaluate the records by their own. In this sense, it may be said that persons and institutions that will consult for producer organizations and farmers have a major and significant responsibility.

15.4 Economic (Financial) Analysis of Dairy Cattle Enterprises

15.4.1 Developing the Balance Sheet

This section addresses how the economic and financial analysis of the activities of a dairy cattle enterprise will be conducted. However, on the grounds that the existing enterprises in our country are not engaged in merely animal production and additionally carry out vegetative production, the topics are dealt with in a wider framework.

In order to measure the success of an enterprise or branch of activity, i.e. to conduct an economic analysis thereof, first the asset breakdown of the relevant enterprise or production activity should be prepared. In other words, the inventory should be conducted. In its simplest meaning, conducting of an inventory in an agricultural enterprise includes the listing and valuation of assets and liabilities. Inventory is defined as follows in the Tax Procedure Law: "Conducting an inventory is to determine absolutely and in a detailed way the assets and liabilities as of the balance sheet date by counting, measuring and valuing them." These processes may be recorded in enterprises in the form of inventory records. Generally, inventory is conducted in two periods in agricultural enterprise, one of which is year beginning and the other is year-end. However, it is not required to do so exactly. Inventory may be conducted in any desired time.

Balance sheet, one of the basic financial statements of an enterprise, is obtained in consequence of the conducting of an inventory. Balance sheet is an essential statement demonstrating the economic structure of the enterprise as of the inventory date. A balance sheet may simply be expressed with an equation called balance sheet equation:

Assets + Receivables = Owner's Equity + Liabilities

Left hand side of the equation, which is assets and receivables, is the total assets and the right hand side of the equation, which is owner's equity and liabilities, is the total liabilities. Economic values in enterprises may be classified in different ways. However, the following classification method is recommended for agricultural enterprises as it facilitates the enterprise analysis (Aras, 1988).

A. ASSETS

I. Farm assets

1. Land
2. Improvements
3. Buildings
4. Plants

II. Operating assets

1. Machinery and equipment
2. Livestock
3. Stocks (Crops and supplies)
4. Cash and receivables

B. LIABILITIES

I. Current liabilities

1. Short-term liabilities
2. Medium and long-term liabilities

II. Noncurrent liabilities

Real estate debt (Rented land value)

III. Owner's equity

Items in the assets may be classified in a more detailed way if required for a more detailed analysis of operating results. In the classifications made within the framework of general accounting rules, assets include: 1. Current assets (cash balance, receivables, stocks) 2. Fixed assets (lands and plots, land improvements, buildings, plants, livestock, and machinery and equipment).

While the receivables and assets used in production in the total assets are classified according to their feature, items in the total liabilities are classified as to (sources) where they have been provided from. Total assets or total liabilities represent the total amount of money invested in the enterprise, a very important indicator also called as capital amount.

Balance sheet contains the values and money equivalent of items specified above as of the balance sheet date. Thus, values of assets are determined (valuation, appraisal) during the conducting of inventory. The method to be applied for the valuation may vary depending on the asset dealt with.

Valuation Methods

It is possible to mention three major methods commonly employed in valuation:

1. Cost value
2. Market value
3. Income capitalization

Cost value method is based on the assumption of how much it would cost to reproduce the addressed asset with the current prices and through existing production methods (Aras, 1988). In the cost value method, the total cost (production) expenses of the addressed asset under the conditions applicable on the day of calculation are computed. Thus, reproduction cost of the relevant asset or reconstruction cost of the relevant building is calculated. For

instance, if it is desired to find the value of a building, current (as of the inventory date) value is estimated by deducting the depreciation of the building (related to its age) from its reconstruction cost.

Market price method is one of the most commonly used methods for valuation. This method is based on the principle to value the relevant asset over the price it would have if it were traded in the market. Although the sale of the good is, in reality, out of the question, market prices of the counterparts of the good are used to determine its value. In this method, it is essential that market data are available and the market structure has the conditions of a market economy. This method may be effectively applied in the valuation of goods frequently traded in the market. It is particularly employed in the valuation of products and materials to be used as inputs. In such uses, however, market prices should be carefully transformed into farmyard prices. Farmyard price of, for instance, feed is calculated by adding the transportation cost to the market price. Farmyard price of a product produced within the enterprise is calculated by subtracting the transportation and, if any, other marketing costs from the market price. This method can also be employed in land valuation if reliable information is available. For land valuation, the land should be the subject of a trade in the region. This method is also commonly applied in the valuation of livestock.

Income capitalization is a method used in the valuation of income-producing assets (goods). It is based on the principle to relate the value to the annual net return that is or can be generated from the asset. The following equation is used in this method:

Land value = Annual average recurring net return / Capitalization interest rate

The main difficulty in this method lies in the calculation of annual average net return in a reliable way. Thus, this method requires a quite detailed study. Therefore, it is beneficial to not dwell on this subject in this section.

After dealing with the valuation methods briefly, the section also addresses which methods can be applied in the valuation of assets in the total assets.

In land asset valuation, purchasing costs are added to the purchase price of the land if it has just been purchased. For the valuation of lands possessed since the past, one of the following methods may be employed: tax value, rental value, revenue method or precedent value (market price). Under normal conditions, it is stated that ten times the normal annual rental value of a land gives its total value (Aras, 1988). As the land tax is not effectively applied in Turkey, land valuation over the tax value is not deemed appropriate. The use of precedent value method can facilitate the easy and rapid obtainment of results. It is expedient to value the lands that have gained plot status through the use of precedent value.

It may be said that the most convenient method to be employed in the valuation of buildings and other agricultural constructions is the cost value method. Recently constructed structures are valued directly through the use of construction costs, and old buildings are valued through the estimation of reconstruction costs. As buildings and land improvement

assets (wells, channels, etc.) are not frequently traded in rural areas, i.e. they are not readily marketable, market price method is not appropriate for the valuation of such assets. Likewise, since structures are rarely rented in rural areas, the use of revenue method in the valuation of structures would be inconvenient.

Before discussing the methods that may be employed in the valuation of plants asset, it is beneficial to divide the plants asset into two groups: Annual plants (field inventory) and perennial plants.

Cost value is taken into account in the valuation of annual plants, i.e. field inventory. In other words, the sum of costs incurred for the relevant plants up to the inventory date is used as the field inventory value. In some cases, however, harvest date may be close. Then, the costs to be incurred for harvesting the product will be required to be subtracted from the value calculated from the multiplication of the expected amount of the product by its farmyard price.

Two diverse cases may be in question in the valuation of perennial plants. Value of young trees that have not yielded fruits yet is estimated through the use of cost value method. This value also represents the total expenses incurred until the valuation date. Market prices (precedent value) and capitalization of income methods are employed in the valuation of trees yielding fruits. In the precedent value method, the value of trees may be found by subtracting the bare land value of the orchard from its precedent value.

For the valuation of tools and machinery assets, market prices of new tools and machinery are generally used. In some cases, for instance, for tractors, prices in the second hand markets may also be used to value a machine. This method may be particularly used for the valuation of tools and machinery, which is not, manufactured any more.

The use of market prices and precedent values are frequently preferred in the valuation of livestock assets.

As mentioned above regarding the market price method, farmyard prices may be used in the valuation of stocks. Another consideration that may be specified here is that, apart from precedent values, market prices can also be employed in the valuation of products produced in the farm and given to the livestock as feed.

15.4.2 Annual Operating Results

In the case that economic analysis of the production activities within the enterprise is required, first annual total revenues and costs should be computed. In this framework, this section firstly deals with how to calculate the annual total revenue (gross product and gross output values) and then annual total costs (production costs and operating costs).

This part primarily addresses how to calculate the annual revenue the farmer generates from the dairy cattle farm activities. If other production activities than dairy cattle farming are being carried out, the farmer will naturally generate revenue from such activities as well.

Same things apply to the costs as well. In other words, the main purpose in this section is the economic analysis of the dairy cattle farming activity rather than of the enterprise as a whole. Yet, explanations needed to conduct an analysis of the whole enterprise when required are made in the remaining parts of the section.

Operating Income

Annual total revenue is expressed as gross product if the whole enterprise, i.e. animal production as well as vegetative production and, if any, other activities, is taken into account. Gross product (GP) consists of gross production value of vegetative production, gross production value of animal production, non-operating agricultural income and rental value of the house the farmer resides in. Gross production value of vegetative production comprises the value calculated by the multiplication of the amounts by the prices of plant products (main crops and by-products) produced, and increase in the plant asset productive inventory. Similarly, gross production value of animal production comprises the value of animal products produced (main products and by-products) and increase in the animal asset productive inventory. Possible reductions that may occur in plant and animal assets are taken into account while calculating the costs.

In the case that products produced within the enterprise are used as input in the production activities, the value of such products are recorded as revenue in the gross production value of the relevant production activity. In this case, this value needs to be recorded as cost in the activity where the relevant products are used as input.

Non-operating agricultural income, which is required to be taken into account in GP calculation, has two typical forms. First, one is the wages earned by the family members in return for their services in agricultural activities of other enterprises. Non-operating agricultural income generated in this way is taken into account in GP calculation.

Second, it is recommended to take into account the rental value of the house the farmer resides in while calculating the GP. Though, rental value of the house the farmer resides in is not included in GP calculation in many studies.

Determining the Gross Production Value (GPV) of Dairy Cattle Farming

Naturally, a significant portion of the total production value in dairy cattle farms is constituted by the gross production value of dairy cattle farming. Thus, this part deals with how to calculate the gross production value of dairy farming. However, general principles apply to other animal production and vegetative production activities as well.

Annual gross production value in dairy cattle farming is composed of the total value of milk and milk products, i.e. milk revenue, increase in the livestock asset productive inventory, and value of by-products (manure, etc.). Apart from these, subsidy payments made by the government under different names are included in the calculation of gross production value, too. Revenue items are shown in Table 15.1. The Table also contains the values per cow and

per 100 litres of milk production. These values can be used to compare the current values of the enterprise to its past values as well as values of other enterprises.

Table 15.1 Dairy cattle farming gross production value (gross income)

Revenue items	Amount (Ton)	Average price (TL)	Sum (TL)	Per cow (TL)	Per 100 litres of milk production (TL)
1. Milk					
2. Increase in inventory value					
3. Manure					
4. Other subsidiary revenues					
Total					

Milk revenue is calculated by the multiplication of the amount of milk produced (sold and consumed, etc.) with its price. If milk is processed to produce various milk products, the value of such milk products is included in the calculation of the milk revenue. However, if this processing is in the form of an industrial production, this activity should be regarded as a diverse activity. The value of the milk consumed by the family itself is included in the milk revenue as well.

Increase in the value of livestock asset productive inventory is one of the significant revenue items in dairy cattle farming. In enterprises that raise their own breeding livestock, which have animals of various ages in the herd so as to renew the herd, the revenue arising out of the increase in the value of young animals in one year is called the increase in the value of productive inventory (Kiral et al., 1999). It is a value calculated due to the increase in the value of animals stepping into a new age.

Purchases, births, deaths, sales and slaughters due to various reasons, which cause change in the herd population, should be followed up and recorded in order to determine the increase in the value of inventory in herds containing cattle of different ages. Herd flow chart shown in Table 15.2 is prepared taking into account the livestock flows within the year. Animals in the herd flow chart are grouped according to their age classification. However, this chart may be prepared in more detail if required. The equation given below may be made use of in an attempt to prevent any mistake in this chart. It shows how to find the year-end herd population from the year beginning herd population taking into account the livestock flows within the year.

Year beginning herd population + purchases + births – (sales+ slaughters + deaths) = Year end herd population

Table 15.2 Herd flow chart

	Year Beginning		Purchased		Born	Died		Sold		Slaughtered		Year End	
	Quantity	Value (TL)	Quantity	Value (TL)	Quantity	Quantity	Value (TL)	Quantity	Value (TL)	Quantity	Value (TL)	Quantity	Value (TL)
Bull													
Slaughter cow													
Breeding cow													
Pregnant heifer													
Heifer													
Bullock													
Female weaner													
Male weaner													
Male calf													
Female calf													
Total													

Inventory value increase (IVI) is computed with the equation given below. The positive value computed is taken into account in the calculation of dairy cattle farming gross production value. One of the considerations required to be specified here is that the inventory value increase should be cleared of the increases due to inflation. As is known, prices of goods have considerable increases in inflationary periods. To avoid the inflationary impact, it is adequate to calculate the value of year beginning livestock using the year-end prices.

IVI= Year end herd value + value of the sold + value of the slaughtered - (year beginning herd value + value of the purchased)

Manure revenue is the value of manure obtained in one year. In most regions, manure in agricultural enterprises is used in fields or orchards of the enterprise. Although rarely, enterprises in some regions may sell the livestock manures. Even in the case that manure is not sold but used within the enterprise, the amount of manure is multiplied by the precedent price to find the manure value.

As mentioned above, subsidiary revenues include the subsidy payments made by the government under different names.

Production and Operating Costs

Cost may be defined as all labor done and all expenses incurred to carry out production. In other words, cost is the monetary expression of inputs used to carry out production. Production costs are the combined costs of raw material and labor incurred in producing goods. Annual production costs are divided into two groups: Variable costs and fixed costs. Variable costs are costs that vary depending on the amount of production and can be easily distinguished for which branch of production they are incurred. They do not exist if no production exists. Fixed costs are costs that are incurred regardless of the amount of production and exist even if no production exists. They are the costs that emanate when the means of production are owned.

Production costs may be computed for the entire enterprise as well as for each production activity severally. Whether for the entire enterprise or each production activity, the scope and calculation method of production methods do not change. In this framework, variable and fixed costs of an illustrative dairy cattle farming enterprise are given in Table 15.3, based on the definitions made.

Variable Costs

Temporary labor, seed, seedling, fertilizer, medicine, tools and machinery rental, tools and machinery repair and maintenance, oil, fuel, water, marketing, etc. may be cited as examples of vegetative production variable costs. Animal production variable costs generally consist of temporary labor, roughage and concentrate feed expenses, medicine and veterinary expenses, artificial insemination, livestock insurance, machinery rental, fuel, tools and machinery repair and maintenance expenses, electricity, other current expenses (water, salt, bedding, chain, halter, disinfectant, etc.), marketing expenses and variable costs interest yield.

Temporary labor cost is calculated by summing the payments made in kind and cash in return for the temporary labor done within the enterprise.

Material costs (feed, medicine, etc.) constitute a significant portion of variable costs. Materials used for production by the enterprise owner may be procured in various times and through various ways. Particularly, the procurement of inputs such as feed and medicine can be performed through purchases on credit. Thus, one should be careful while determining the costs of the said inputs. The amount paid in purchases on credit consists of two parts indeed. The first part is the cost of the input and equals the sum calculated using the cash price of the input. The remaining part is the credit cost. It is the financing cost for the input. This cost is like a short-term debt interest payment and should be included in variable costs interest. Even if the input has been purchased on credit, it is beneficial to calculate the amount using the cash prices.

Table 15.3 Dairy cattle farming production costs

Cost items	Amount (TL)	Per cow (TL)	Per 100 litres of milk (TL)
I. Variable costs			
1. Temporary labor expenses			
2. Feeds purchased			
3. Feeds produced within the enterprise			
4. Medicine expenses			
5. Veterinary fee			
6. Insemination and artificial insemination fee			
7. Livestock insurance			
8. Machinery rental			
9. Fuel			
10. Tools and machinery repair and maintenance			
11. Electricity			
12. Other current expenses			
13. Marketing expenses			
14. Variable costs interest (…%)			
II. Fixed Costs			
15. Family labor wages			
16. Permanent labor wages			
17. Depreciations			
a. Building and other agricultural structures			
b. Tools and machinery			
c. Livestock			
d. Other			

Cost items	Amount (TL)	Per cow (TL)	Per 100 litres of milk (TL)
18. Building repair and maintenance			
19. Taxes (taxes concerning ownership)			
20. Insurance (vehicle, fire, etc.)			
21. General management expenses			
22. Debt interest paid			
23. Owner's equity interest yield			
24. Other fixed costs			
Total production costs			

A significant portion of material costs in livestock farming is composed of roughage and concentrates feed expenses. Enterprises may use some of the products produced within its body as feed or purchase feed from other enterprises. It is beneficial to record separately the feed produced within the enterprise and purchased from other enterprises in terms of seeing the extent to which the enterprise is dependent on outside feed sources. Market price (farmyard price) as well as the cost of production in the enterprise may be taken into account while pricing the feeds produced within the enterprise. In the case that production cost is used, all expenses included in the production cost of the said product will be required to be calculated.

Among variable costs, medicine and veterinary expenses, artificial insemination, livestock insurance, machinery rental, electricity and other current expenses (water, salt, bedding, chain, halter, disinfectant, etc.) are included in the calculations with the amounts paid for them.

In the case, that plant production is carried out in addition to dairy cattle farming in the enterprise, fuel, tools and machinery repair and maintenance expenses and some other expenses may be included in the scope of common costs. If they do not have such nature, the amounts paid for them are taken into account. An expense is required to be related to more than one branch of production if it is defined as common cost. It will be dealt with how to distribute common costs later in this chapter.

Marketing costs comprise transportation fee and porterage for the carrying of the products sold as well as commissions, taxes such as withholding tax, etc.

The last item in variable costs is variable costs interest. This cost item is also called as working capital interest. Variable costs interest is particularly computed in the case when

there is a time lag between the incurring of expenses and generation of revenues. This time difference is at negligible levels in dairy cattle farming. Thus, variable costs interest in dairy cattle farming may not be computed. As mentioned above, however, in the event that producers pay interest for input purchases they make on credit, this amount paid is considered as variable costs interest.

All variable costs excluding the feeds produced within the enterprise are cash outlays. It may be said that a significant portion of the cost of feeds produced within the enterprise consists of cash outlays.

Fixed Costs

Fixed costs consist of family labor wages, permanent labor wages, depreciation of agricultural structures, tools and machinery, perennial plants, and livestock, building repair and maintenance, taxes (related to ownership), insurance (vehicle, fire, etc.), active capital interest yield and general administration expenses. Active capital interest yield is composed of debt interest paid, land rental paid, sharecropper's share paid if the land is being shared with a sharecropper (share paid after the contribution of the landowner to expenses is deducted), and owner's equity interest yield. Most of these costs are shared costs. That is, they are associated with more than one production activity within the enterprise. Distribution of such common costs to activities is discussed later in this chapter.

Determination of fixed costs and proper calculation of their components in the identification of production costs are strictly dependent on the method employed. Thus, it is necessary to discuss in detail by which way fixed costs should be calculated, why they are calculated and the problems encountered in the calculation of fixed costs. In this framework, each cost item will be elaborated.

Family labor wages are calculated as the amounts the family members earn in return for their services in the enterprise. To that end, actual working times of family members in the enterprise are determined. Times determined as hours are transformed into days based on the principle that eight hours labor equals to one day. In the case that men and women of very different age groups are working in the enterprise, it is beneficial to calculate the total working time in man labor unit (MLU). Coefficients to be used for this purpose are 0.50 for boys and girls between 7-14, 1 for men and 0.75 for women of 15-49 age groups, 0.75 for men and 0.50 for women of higher ages. Family labor wage value may be computed multiplying the total time calculated as man working day by the daily wage of a permanent outside worker serving in similar works. Daily man's wage in the region can be used instead of the daily wage of permanent outside worker. Alternatively, in the case that adult men and women work in the enterprise, total working times are calculated as days separately for men and women. Then, family labor wage value can be calculated multiplying the number of working days of men by men's daily wage and the number of working days of women by women's daily wage.

In the case that permanent workers are employed in the enterprise, all wages paid to them in cash and kind is taken into account as labor expenses. In the event that administrative

and technical personnel are employed in the enterprise, total amounts paid to them are naturally taken into account as well.

If the buildings, machinery and equipment are leased, rentals paid for them are included in production costs. If the buildings, machinery and equipment are owned by the farmer, depreciation, interest, repair-maintenance and other expenses related to them are calculated.

Depreciation is an important fixed cost item. It is calculated for all fixed assets in the enterprise (excluding land). Mostly, depreciations of buildings, tools and machinery, and cows are more of an issue in dairy cattle farming. Depreciations are calculated since fixed assets in the enterprise are used in production, get physically and technologically old, and thus lose value.

Calculation of depreciations is more complex and difficult compared to other cost items. Accurate calculation of depreciation costs is crucial both for the enterprise management and in terms of knowing the real value of capital. Additionally, calculation of depreciation costs is important in terms of comparing the possession of fixed capital items with leasing alternative (Kiral et al., 1999).

Various methods can be employed to calculate depreciation costs. In the case that it is desired to determine the annual average cost of the fixed asset, as is the case here, straight-line method may be said to be the proper method (Yilmaz et al., 1998). Firstly, economic life and salvage value of the asset should be known in order to compute the depreciation of the asset on which straight-line method is used. According to the straight-line method, annual depreciation of, for instance, tractors are calculated by the help of the following equation:

Annual depreciation=(Cost-Salvage value)/(Useful life)

Economic life (service life) is the number of years over which the tractor is planned to be used. If the manager plans to use the tractor until it becomes dysfunctional, its service life will be the time elapsed until it is scrapped. Economic life values for various assets is published by the Ministry of Finance pursuant to the Tax Procedure Law (General Communiqué on Tax Procedure Law no. 333) Salvage (junk) value is the value of the asset at the end of its economic life. This value should be estimated as of the date of calculation as well.

Depreciation amounts to be calculated are strictly dependent on the economic life and salvage value to be selected. Thus, salvage value should definitely be taken into account in the depreciation calculation (excluding tax purposes) of inventories such as a tractor. Furthermore, the salvage value should be compatible with the service life selected (Yilmaz et al., 1998). Relation between salvage value and service life may vary from country to country. For instance, studies conducted in developed countries indicate that salvage value of a tractor at the end of its 10-year economic life is 29.50% (Boehlje and Eidman, 1984) and 35% (Mayfield et al., 1981) of the purchase price of a new tractor. On the other hand, studies conducted in our country indicate that salvage value of a tractor is 71.7% (Isik et al., 1995) and 60-65% (Yilmaz et al., 1998) of the purchase price of a new tractor.

The calculation of depreciation for livestock is a little bit different. Firstly, it is beneficial to know that depreciation calculations should be performed for livestock as they lose value over time as well. It should be noted that animals in adolescence do not depreciate, as they do not lose value in this period. Depreciation is calculated for cows and, if any, bulls in a dairy cattle farm. In line with the straight-line method, the following formula is commonly used in calculating the depreciation of cows.

Annual depreciation=(Breeding value-Slaughter value)/(Service Period)

Breeding value is the value of the cow at the age it starts production. Slaughter value is the value of the animal when it is separated from the herd and put for sale. If breeding and slaughter values of the livestock asset are not known, precedent prices can be taken into account to calculate the depreciations.

Another consideration required to be taken into account here is whether the herd renewal cost will be calculated or not. In the case that depreciations are calculated in a dairy cattle farm, it is not necessary to compute the herd renewal cost.

Another fixed capital cost item required to be taken into account in cost calculations is interest. As is known, interest cost is calculated as the cost of using the available money for the said fixed capital investment. Since interest is directly paid for debts and assets purchased on credit, such amounts paid are considered as interest cost paid. However, real interest rate should be multiplied by the average investment amount in order to calculate the interest amount of assets that belong to the owners of the enterprise and were previously acquired. Average investment amount is found by dividing the sum of purchase price of the new asset and salvage value by two (Yilmaz, 1997)

Annual interest cost=(Purchase price of new asset+Salvage value)/(2) X i

In the above formula, 'i' denotes the real interest rate. Real interest rate in a given period is calculated by the help of the following equation.

$(1+i) = (1+r) / (1+f)$ where; i = Real interest rate

r = Nominal interest rate

f = Inflation rate

Interest calculations for livestock differ from other assets. The following equation is employed to calculate interest cost for livestock asset.

Annual interest cost=(Breeding value + Slaughter value)/(2) X i

Aside from the fixed costs specified up to here, cost of operations performed for the repair and maintenance of buildings within the year is regarded as building repair and maintenance cost. Apart from this, taxes, duties and charges related to ownership such as land tax are included in fixed costs. Insurance costs related to the assets of the enterprise such as vehicle insurance and fire insurance are considered to be among fixed costs.

General administration (management) costs include cash outlays used in the execution and administration of the enterprise, such as electricity, communication, stationery, etc. as well as administration wages. In practice, however, it is not quite possible to clearly present the said costs separately from the family consumption particularly in family enterprises. In this case, general administration costs are accepted to be 3% of total costs and used commonly in this way.

Considering the whole enterprise, another cost concept frequently used in economic analyses is operating costs. The difference of operating costs from production costs is that operating costs do not contain active capital interest yield. In other words, total operating costs can be calculated by subtracting the active capital interest yield from the total production cost of the enterprise.

Common Costs and Distribution of Costs to Activities

In an agricultural enterprise, costs are examined in two main groups according to their assigned to (enterprise) branches of production: direct costs and common (shared) costs. Direct costs are costs that absolutely belong to an enterprise and are not incurred if the relevant production activity is not carried out. Common costs are costs that cannot be directly distributed to production activities and thus belong to more than one production activity. Hence, they cannot be directly attributed to a production activity and may exist if one of these production activities changes or even is abandoned. Permanent labor costs such as expenses for guard, etc., tractor costs, building costs, general administration expenses, and expenses of other common service buildings may be cited as examples of common costs. Besides, expenses of deep wells, cars and trucks, workshops, warehouses, social service units that serve in more than one branch of production within the enterprise are included in this scope and may be distributed to production activities by means of using certain distribution keys. Common costs can be distributed among branches of production, using one of the methods given below (Kiral et al., 1999).

1. Distribution can be performed according to the share of assets (capital) of each branch of production in total assets (capital).
2. Distribution can be carried out considering the utilization of relevant buildings, equipment and services by each branch of activity. This method is one of the objective methods frequently used. For instance, common costs in respect of a tool or machine can be attributed to the branches of activity utilizing that tool or machine so long as those branches of activity use the relevant tool or machine. However, it requires regularly maintained time measurement records.
3. In solvency method, common costs can be distributed according to the contribution percentage of branches of production to the total revenue and total gross profit of the enterprise. Distribution is generally based on the gross production value (GPV).

4. Ratios such as the share of costs resulting from each production activity in the total costs of the enterprise may also be used in distributing common costs to branches of production activities.

Calculating the Unit Production Cost

This section deals with how to calculate unit (kg) costs (e.g. increase in milk and live weight). One of the essential issues for a manager (farmer) is to know the total cost of each product he produces. Thus, he can enjoy the possibility to have information regarding to which extent the product prices cover the costs. Various calculation methods may be used in computing the costs of various products. Generally, simple or joint cost calculation methods are employed in the calculation of agricultural costs (Kiral et al., 1999).

Simple Cost Calculation Method:

Simple cost calculation method is employed if a single product is obtained in consequence of the production process. In simple cost, the total cost incurred in a branch of activity is divided by the amount of product obtained in consequence of that branch of activity.

Unit product cost (TL/Kg)=(Total production cost (TL))/(Amount of production (Kg))

Joint Cost Calculation Method:

In the joint cost calculation method, if more than one product is obtained from a production activity, the products that have a relatively lower share in the total revenue generated from the products obtained in this branch of activity are regarded as by-products, whereas other products are regarded as main or joint product. This distinction considers the ratios of products in the total revenue as well as the purposes of the enterprise. Two different techniques can be employed to calculate costs in this method: Residual technique and relative sale values technique.

a. Residual technique

Residual technique can be applied if a main product and a by-product are obtained in a production activity (as is the case in wheat production). To find the unit cost of the main product in this technique, by-product revenue is subtracted from the total production cost incurred for the relevant branch of activity, and the computed value is divided by the amount of the main product produced.

Main product cost (TL/Kg)=(Total production cost -By product revenue)/(Amount of main production)

b. Relative production values technique

For production activities in which joint cost calculation method is employed, the relative sale values technique is recommended to be applied in the case that more than one product are obtained, which cannot be regarded as by-products (as is the case in dairy cattle farming). This technique involves the distribution of the total cost incurred in the relevant

branch of activity according to the rate of contribution of each joint product to the total gross production value. Then each product's cost share is divided by the amount of production of the obtained products to figure the unit costs of products. It is beneficial to illustrate the subject with a computational example so as to understand it better.

Example: A dairy cattle farm incurred a total annual cost of TL15,500 to obtain the joint products given in the Table below. Say the enterprise generated a side income of TL500 from the manure obtained in consequence of the production activity in question. This side income is subtracted from the total annual costs (Y=TL15,500 - TL500 = TL15,000) to find the total production costs to be distributed to joint products. In this dairy cattle farming production activity, a gross production value (GPV, sale amount) of TL18,500 was obtained from the milk and inventory value increase (IVI), and the shares of the milk and increase in the value of inventory are found. These ratios are multiplied by the amount computed when the by-product's revenue is subtracted from the total production cost, which is TL15,000, to compute the production costs per milk and per inventory value increase. Production costs of each product are divided by production amounts to figure unit costs of products.

Table 15.4 Calculation of unit costs by relative sale values technique

Joint Products	Amount of Production (1)	Price (TL/kg) (2)	GPV (TL) (3=1x2)	Cost Share (4)	Production Costs (TL) (5=Yx4)	Unit Cost (TL/kg) (6=5/1)
Milk	25000 kg	0,50	12500	0,68	10200	0,408
IVI*	-	-	6000	0,32	4800	-
Total	**-**	**-**	**18500**	**1,00**	**15000**	**-**

*Live weight increase can be computed in kilograms as well. Similarly, it is possible to calculate the cost of one kg of live weight.

Profit Indicators

Gross margin: It is possible to classify production costs, previously examined in detail, as cash and non-cash costs. Variable costs are generally costs paid in cash and are used in calculating the gross margin of the enterprise. Gross margin values are calculated as in the equation below.

Gross margin = GPV – Variable costs

Gross margin is an indicator frequently used in comparing different production activities in the short-term. It is particularly used in short-term production planning.

Net profit: Another important profit indicator is net profit, which is simply defined as the difference between total revenues and production costs. Net profit indicates the amount

obtained by the farmer when the shares of all production factors are subtracted. Farmer is an entrepreneur who undertakes the risk of the production activity. Hence, net profit is the share taken by the farmer from the production and is also be expressed as the risk return. It is used in calculating the profitability ratios, which can also be expressed as capital efficiency, and is calculated as in the equation below.

Net profit = GPV – Production costs

Operating Profit: It is an indicator of success used in comparing enterprises and calculated for the whole farm. It is figured by subtracting the costs of the enterprise from the gross product. Net product is composed of the return of total assets, in other words, return of assets, and share of the farmer (from the net profit)

Operating Profit = GP – Operating costs

Net Farm Income: Net farm income calculated for the whole farm is calculated by summing the operating profit (OP) and opportunity cost of unpaid family labor (UFLC), opportunity cost of management (MC) and subtracting debt interest payments, land rental paid and/or net share of the sharecropper from this sum as demonstrated below.

Net farm income = NP + UFLC + MC – Debt interest – land rental - net share of the sharecropping

Net farm income is composed of the value of the family members' labor, return of owner's equity and net profit. Moreover, Net farm income represents the income the farmer may use to cover the family expenditures, if any, income or corporate tax, and investments.

Cash Flow Analysis

Cash flow analysis can be conducted both for the whole enterprise and for each activity. None of the profit indicators reflects the net cash revenue obtained from the relevant production activity or all activities of the enterprise for two reasons. Firstly, the gross production value or gross product (gross income) are not completely carried out in cash. Secondly, a portion of fixed costs is included in the costs incurred in cash. Such costs, which can be named as other cash outlays, are composed of other fixed costs such as permanent worker wage, debt interests paid, building repair and maintenance expenses, taxes, insurances, general administration expenses and building rental to be paid in cash.

Cash revenues of dairy cattle farming are revenues from milk and milk products, livestock sale revenues, manure sale revenues and, if any, other subsidiary revenues. For the whole enterprise, plant production cash revenues and, if any, non-operating agricultural revenues may be added to livestock cash revenues.

Annual net cash revenue can be calculated by subtracting the cash fixed costs from cash revenues (Greaser, 1991). Particularly cash expenses and revenues are used in preparing a cash flow statement. Cash flow statement may be used for cash flow analysis of the enterprise

by months and for short-term financial planning. Generally, this statement is prepared separately for the periods before and after the loan when a loan is borrowed. In such a case, loan's interest and principal repayments are included in the statement after the loan is borrowed. If required, this statement may also be prepared with a wider perspective to contain asset sales and possible investments in addition to the use of credits and loans, which are not listed as revenue or expense.

Table 15.5 Cash Flow Analysis

Revenues and Expenses	Jan	Feb	Mar	...	Oct	Nov	Dec
Revenues							
1. Milk							
2. Livestock sale							
3. Manure sale							
4. Other subsidiary revenues							
I. Total revenues							
Expenses							
1. External labor							
2. Feeds							
3. Medicine and veterinary							
4.							
5.							
.							
.							
.							
II. Total expenses							
Difference (I-II)							
Cumulative difference (±)							

Productivity Indicators

One of the significant criteria used in measuring and evaluating the success of an enterprise or activity is productivity indicators. Productivity is basically defined as the amount of output (product) obtained per unit of input in a given time. Two types of productivity measurement can be mentioned: partial productivity rates and total factor productivity (TFP). These indicators are frequently used to measure the success of an enterprise. In order to measure and assess the success in a more meaningful fashion, these indicators need to be compared to (1) past data of the enterprise, (2) productivity indicators of similar enterprises, and (3) some other economic indicators.

Partial productivity rates

Three types of productivity rate can be calculated depending on which input is used in the denominator: productivity per cow, labor productivity and capital productivity. Each of these productivity indicators presents a criterion regarding how productively and successfully a given input is used in the enterprise. While calculating these rates, both inputs and outputs can be expressed in physical quantities as well as in monetary amounts.

a. Productivity per cow=(Output)/(Number of cows)

b. Labour productivity=(Output)/(Labour employed)

c. Capital productivity=(Output)/(Total capital)

Capital productivity should be explained in more detail in this section. When net profit is used as output while measuring the capital productivity, profitability ratios frequently used in Agricultural Economics studies are calculated. It is possible to mention two different profitability ratios: economic profitability and financial profitability.

a. Economic profitability=(Net profit+Loan interest paid)/(Total assets (capital))

b. Financial profitability=(Net profit)/(Owner's equity)

Economic profitability is more on the front burner for the enterprise, whereas financial profitability is more important for the manager (farmer). This ratio can be compared to the real interest rate. Attaining a profitability ratio higher than the real interest rate indicates success. For instance, an economic profitability ration of 0.15 indicates that each TL 1 invested in the enterprise or activity generates a return of TL 0.15. In other words, profitability ratio of the investment is 15%.

Total factor productivity

Partial productivity ratios measure the productivity of the factor used in the denominator, and presents information concerning only the utilization of that factor. Thus, there is a need for a criterion that will indicate the productivity of all factors used in the production. This criterion is called total factor productivity. It is calculated by dividing the total outputs by total inputs (Sadoulet & Janury, 1995; McConnnell & Dillon, 1997; Yılmaz et al. 2003). Monetary amounts are made use of while aggregating the total inputs and outputs. The following

equation formulated by McConnell & Dillon (1997) is employed to calculate the total factor productivity.

TPF (Gross or net) =(Output (GPV or Net profit TL))/(Total production cost (TL))

When total factor productivity is calculated by the use of gross production value, for instance, as 1.25, this value indicates that revenue of TL 1.25 is generated in return for a production cost of TL 1. In other words, net revenue of TL 0.25 is generated in return for a cost of TL 1. This ratio can be compared to the real interest rate. If it is higher than the real interest rate, then it is possible to say that the business/activity is successful.

References

- Açıl, F. ve R. Demirci, 1984. Tarım Ekonomisi. Ankara Üniversitesi Ziraat Fakültesi Yayınları No: 880, Ankara.
- Aras, A. 1988. Tarım Muhasebesi. Ege Üniversitesi Ziraat Fakültesi Yayınları No:486, Ege Üniversitesi Basımevi, Bornova, İzmir.
- Boehlje, M.D.; V.R. Eidman, 1984. Farm Management, John Wiley and Sons Inc. USA.
- Can, H. 2001. Yönetim Bilimi ve Tarihçesi. Yönetim ve Organizasyon, Editör S. Güney, Nobel Yayın Tanıtım Yayın No: 265, Ankara. ISBN: 975-591-244-4
- Greaser, G. L. 1991. The Farm Management Handbook. The Pennsylvania State University, College Agriculture. http://pubs.cas.psu.edu/Publications.asp, erişim 22.12.2011.
- Işık, A., İ. Akıncı, A. Sabancı, S.M. Say. 1995. Çukurova Bölgesinde Kullanılmış Traktör Pazarı Özellikleri ve Satın Alma Bedellerinin Belirlenmesi. Tarımsal Mekanizasyon 16. Ulusal Kongresi, 5-7 Eylül 1995, Bursa.
- Kıral, T, H. Kasnakoğlu, F. Tatlıdil, H. Fidan, E. Gündoğmuş, 1999. Tarımsal Ürünler İçin Maliyet Hesaplama Metodolojisi ve Veri Tabanı Rehberi. Tarımsal Ekonomi Araştırma Enstitüsü Yayın No: 37, Ankara.
- Koçel, T. 2003. İşletme Yöneticiliği. Beta Yayınları No: 1382, Genişletilmiş 9. Baskı, İstanbul. ISBN: 975-295-162-3
- Mayfield, W.; G.S. Hines; L. Roberts, 1981. A New Method for Estimating Farm Machinery Costs. Transactions of the ASAE, 24 (6):1446-1448, St. Joseph, MI 48095, USA
- McConnell, D. J. and J. L.Dillon, 1997. Farm Management for Asia: A Systems Approach. FAO Farm Systems Manegement Series- 13, Rome.
- Mucuk, İ. 2001. Modern İşletmecilik. Türkmen Kitabevi, Yayın No:80, İstanbul. ISBN: 975-7337-55-2
- Özkan, B. ve İ. Yılmaz, 1999. Tek Yıllık Bitkiler İçin Maliyet Hesaplamaları: Mevcut Durum, Sorunlar Ve Öneriler" Tarım Ekonomisi Dergisi, Sayı 1999/4: 64-80 Tarım Ekonomisi Derneği, İzmir.

- Rehber, E. ve T Tipi, 2005. Tarımsal İşletmecilik ve Planlama. Uludağ Üniversitesi Yayınları No: 2.05-049-0425, Bursa.
- Sarıaslan, H. 1997. Yatırım Projelerinin Hazırlanması ve Değerlendirilmesi. Turhan Kitapevi, Ankara.
- Sadoulet, E. and A. De. Janury, 1995. Quantitative Development Policy Analysis. The Johns Hopkins University Pres.
- Yılmaz, İ. 1997. Tarım İşletmelerinde Sabit Sermaye Faiz Masrafının Hesaplanması. Ç.Ü. Ziraat Fakültesi Dergisi, 12, (1): 187-194, Adana.
- Yılmaz, İ, M. A. Kiracı, D. Özcomart, M. Naz, M. Çetin, 1998. Traktörlerde Amortisman Hesaplama Yöntemlerinin Karşılaştırılması. Çukurova Üniversitesi Ziraat Fakültesi Dergisi, 13 (4), 207-216.
- Yılmaz, İ, E. Dağıstan, B. Koç ve R. Özel, 2003. Hatay İlinde Projeli ve Projesiz Süt Sığırcılığı Yapan İşletmelerin Süt Sığırcılığı Üretim Faaliyetlerinin ve Faktör Verimliliklerinin Analizi. Akdeniz Üniversitesi Ziraat Fakültesi Dergisi, 16 (2), 169-178.
- Yılmaz, I. and B. Ozkan, 2005. Economics of Dairy Farms With Imported Cows. Indian Vet. J., 82, 1179-1182 (2005).

Notes

Notes

Notes

Notes